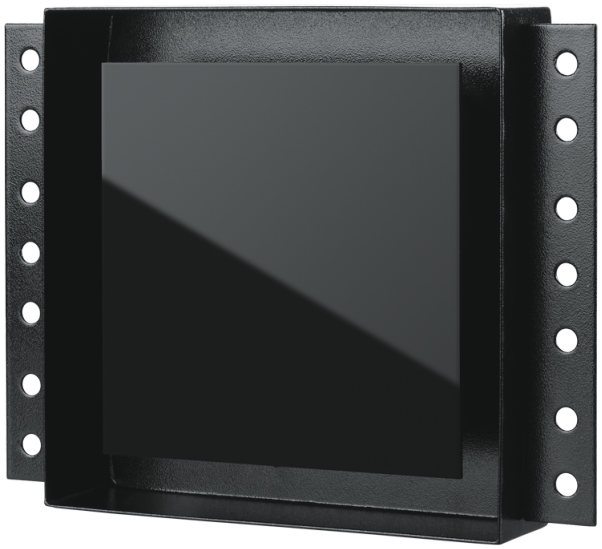

Alphaceram Max 100

Flush-mounted axial fans for extract ventilation

- Impeller type: Axial
- Casing material: Metal

	Unit of measurement	Alphaceram Max 100
Maximum supply voltage	V	240
Minimum supply voltage	V	220
Power supply frequency	Hz	50/60
Maximum airflow	m^3/h	113
Weight	kg	1.28
Ambient air temperature min	°C	1
Ambient air temperature max	°C	40
Ingress protection rating	-	IP24

Dimensions

ØD	H	W	L	L1
99	204	264	86	48

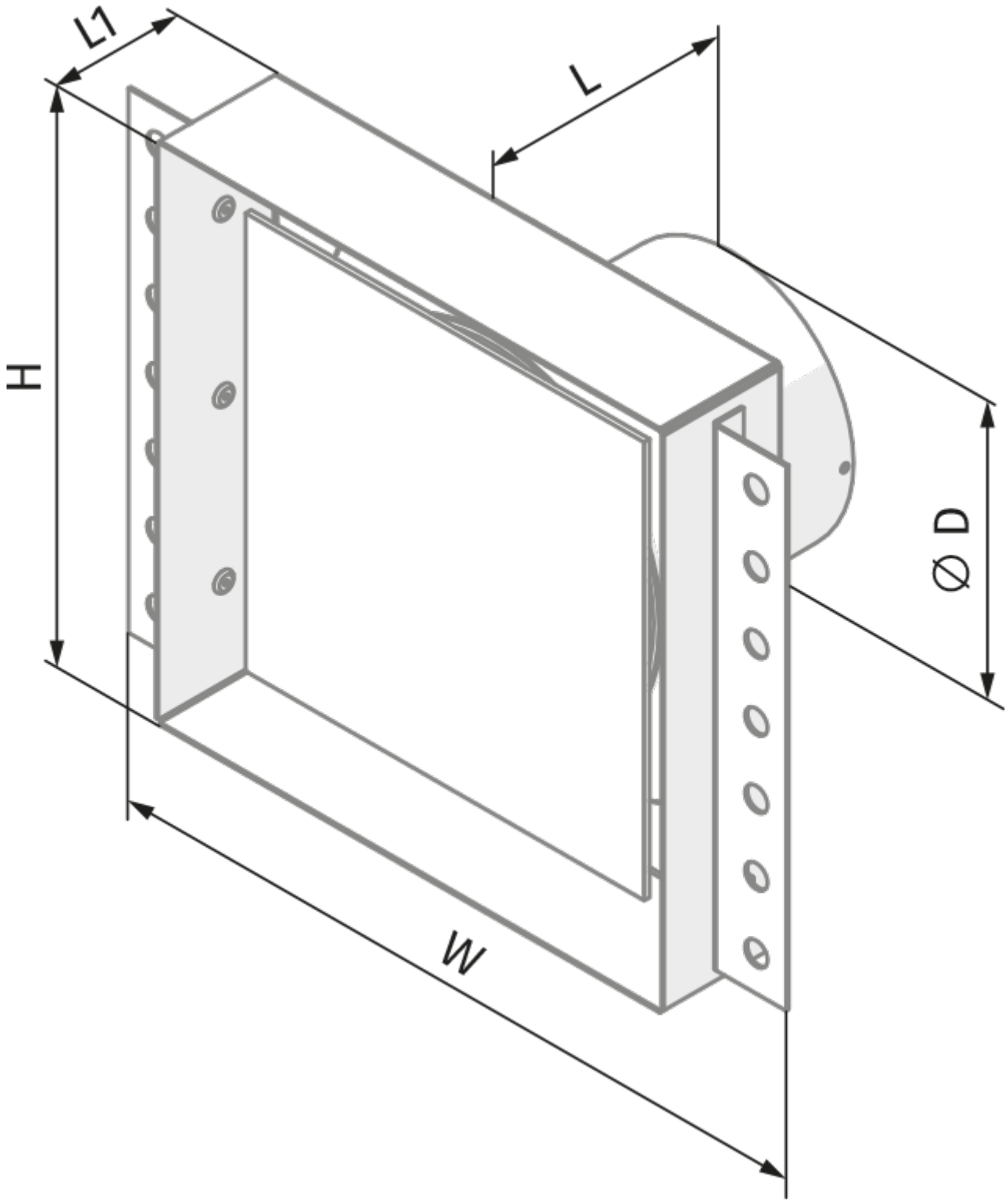

Accessories

Thyristor speed controllers

Name	Photo	Description

CDT E1.8		Thyristor speed controller

Control Panels

Name	Photo	Description
MCD 60/0.3		Control unit for residential fans