

Axis-F 550 4D (220V/60Hz)

Axial inline fans

- Impeller type: Axial
- Casing material: Coated steel
- Installation in any position

	Unit of measurement	Axis-F 550 4D (220V/60Hz)
Phases	-	3
Maximum supply voltage	V	400
Minimum supply voltage	V	400
Power supply frequency	Hz	60
Weight	kg	13.9
Transported air temperature (max)	°C	50
Transported air temperature (min)	°C	-30
Ingress protection rating	-	IP24
Ingress protection rating of the drive	-	IP54
Impeller material	-	Coated steel

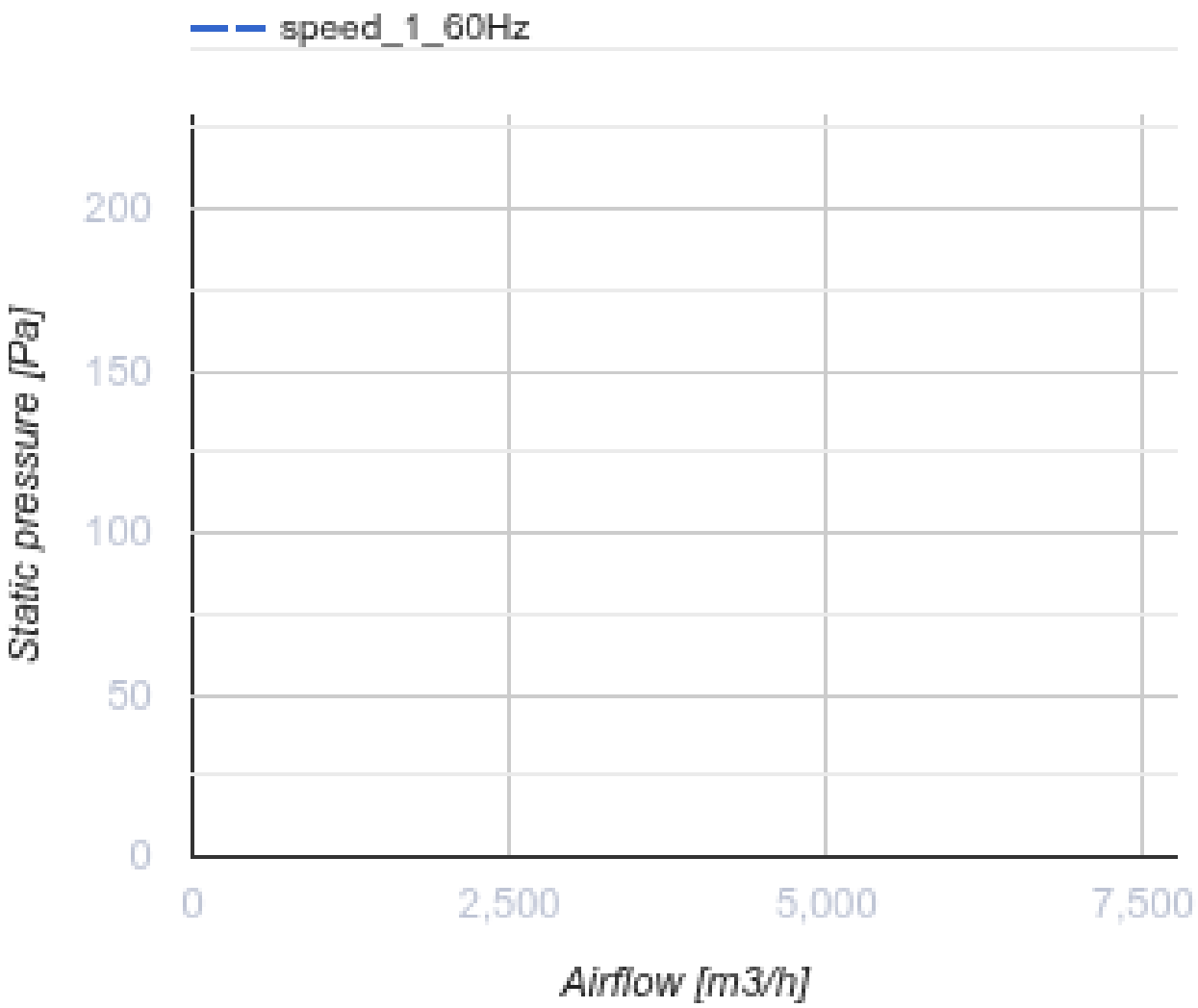
speed_1_60Hz
200
150
100
50
0
Static pressure [Pa]
0
2,500
5,000
7,500
Airflow [m3/h]

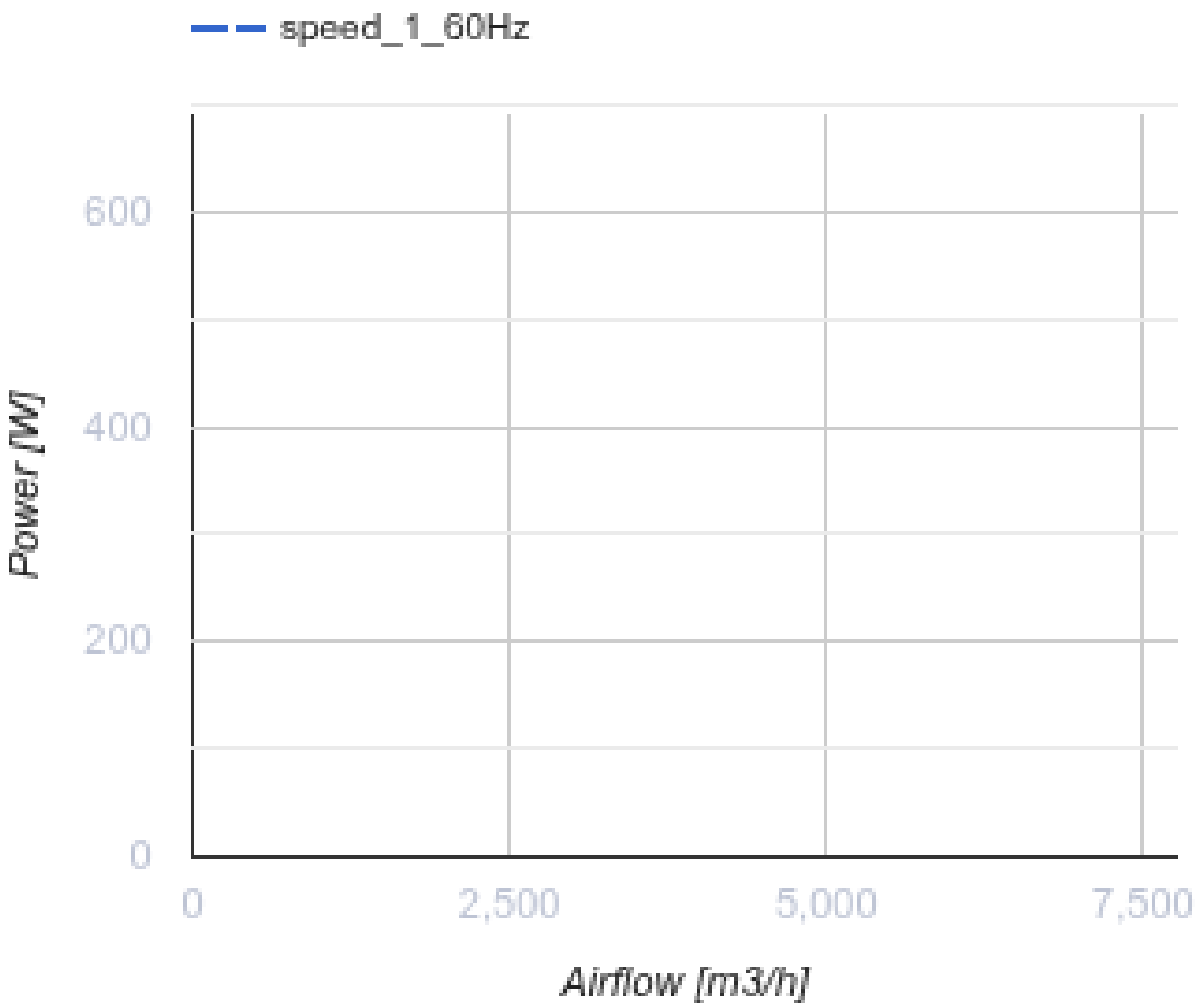

Dimensions

ØD	ØD1	ØD2	Ød	B	L
565	605	636	11,5	660	230

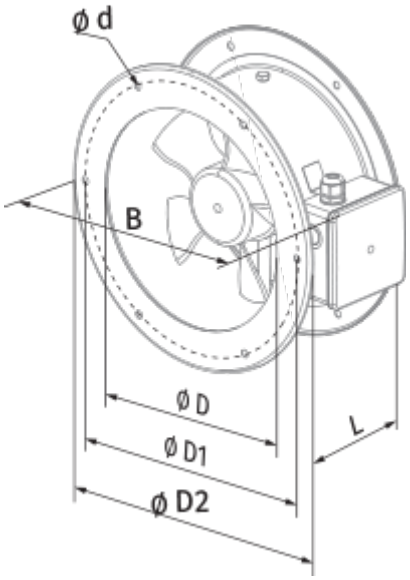
Ø d
B
Ø D
Ø D1
Ø D2
L