

Axis-F 710 8D

Axial inline fans

- Impeller type: Axial
- Casing material: Coated steel
- Installation in any position

	Unit of measurement	Axis-F 710 8D
Phases	-	3
Minimum supply voltage	V	400
Maximum supply voltage	V	400
Power supply frequency	Hz	50
Maximum airflow	m^3/h	12000
Weight	kg	30
Transported air temperature (max)	°C	60
Transported air temperature (min)	°C	-30
Ingress protection rating	-	IP24
Ingress protection rating of the drive	-	IP54
Impeller material	-	Coated steel

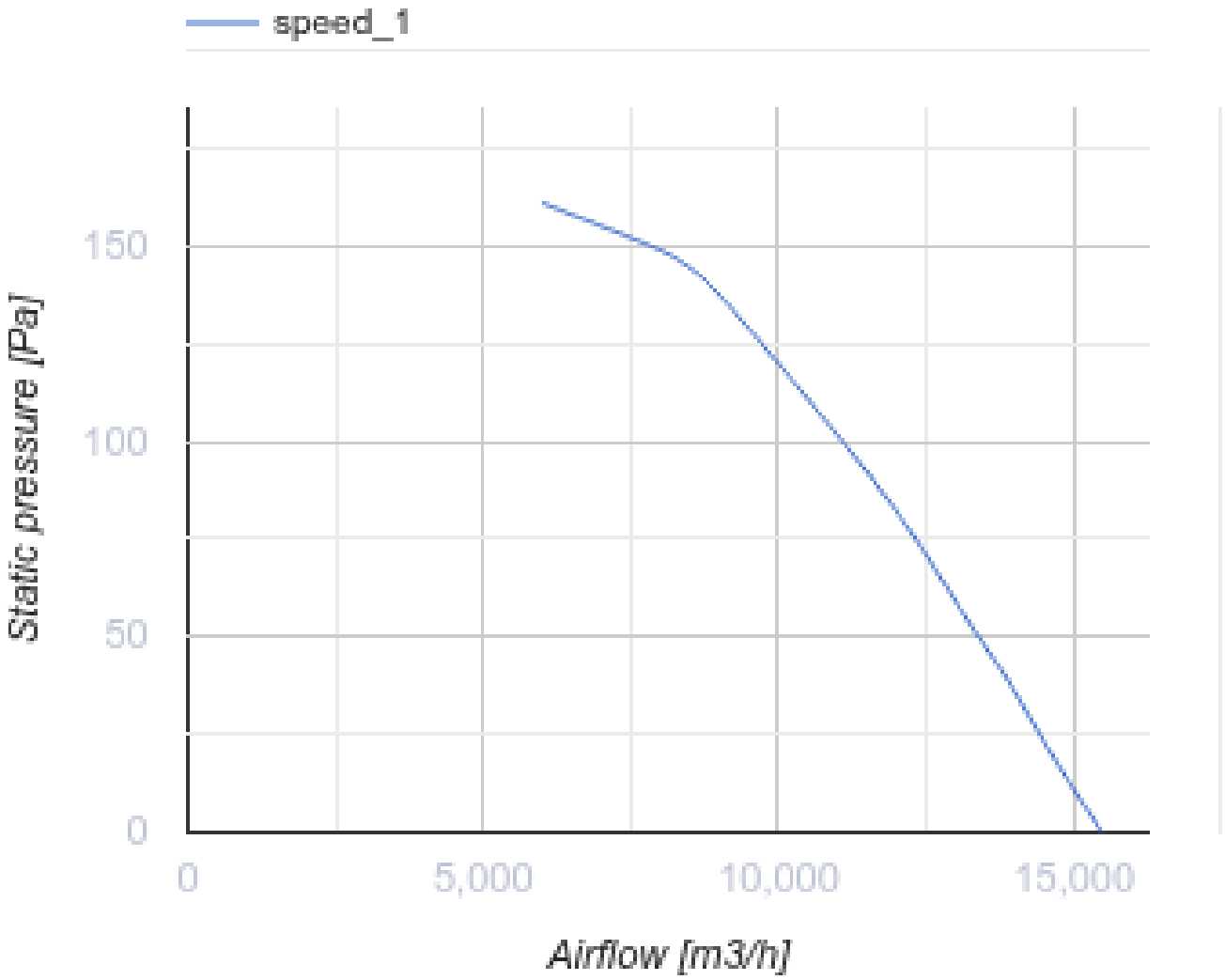
speed_1
150
100
50
0
Static pressure [Pa]
0
5,000
10,000
15,000
Airflow [m3/h]

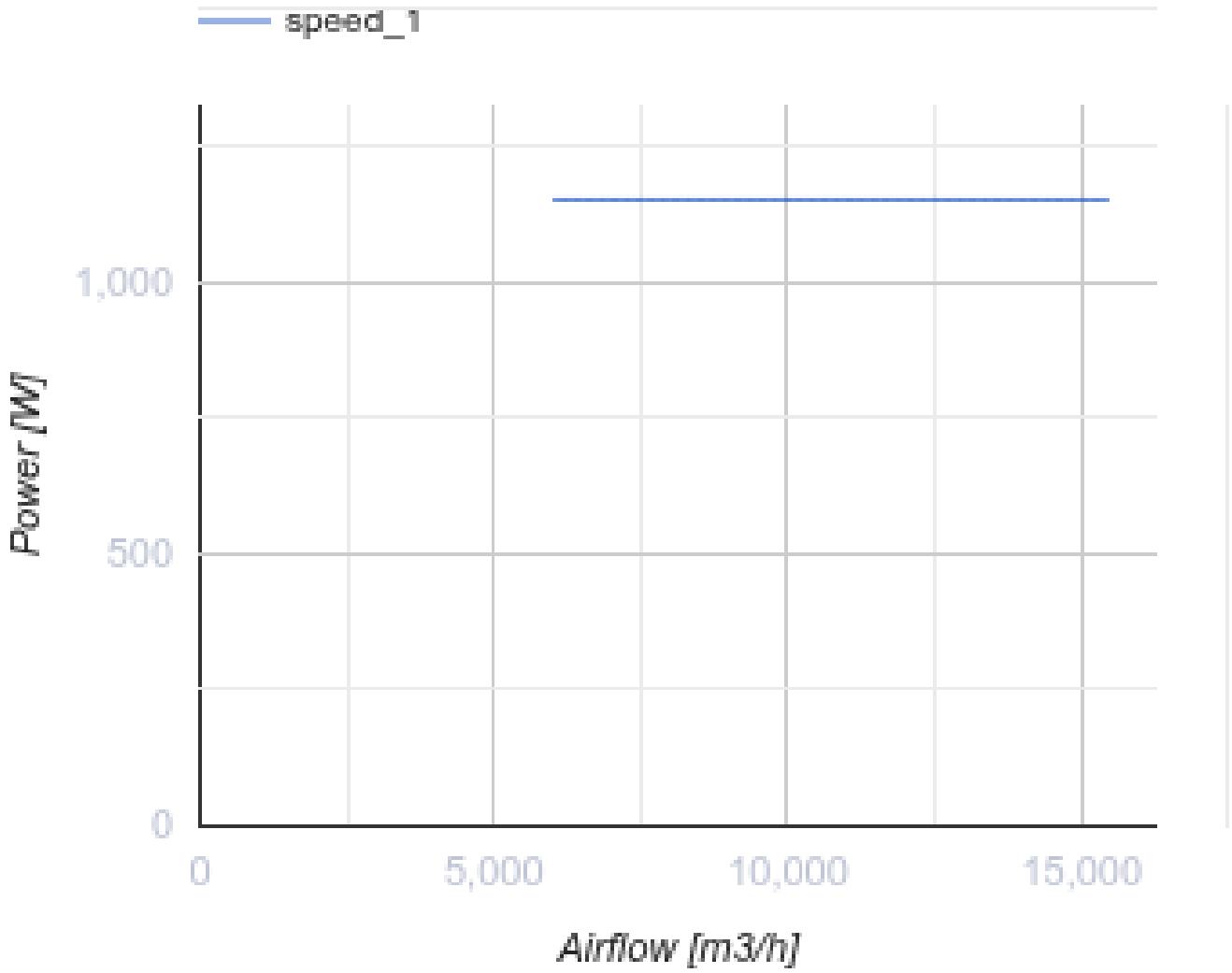

Dimensions

ØD	ØD1	ØD2	Ød	B	L
725	767	805	11,5	835	250

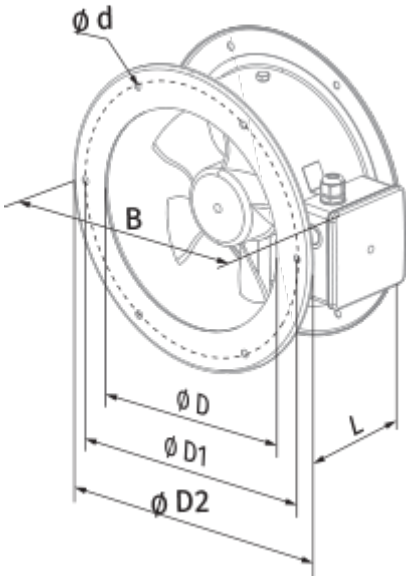
Ø d
B
Ø D
Ø D1
Ø D2
L