

Axis-Q 550 6D (220V/60Hz)

Wall-mounted axial fans

- Impeller type: Axial
- Casing material: Coated steel
- Installation in any position

	Unit of measurement	Axis-Q 550 6D (220V/60Hz)
Phases	-	3
Minimum supply voltage	V	400
Maximum supply voltage	V	400
Power supply frequency	Hz	60
Weight	kg	16.5
Transported air temperature (max)	°C	50
Transported air temperature (min)	°C	-30
Ingress protection rating	-	IP24
Ingress protection rating of the drive	-	IP54
Impeller material	-	Coated steel

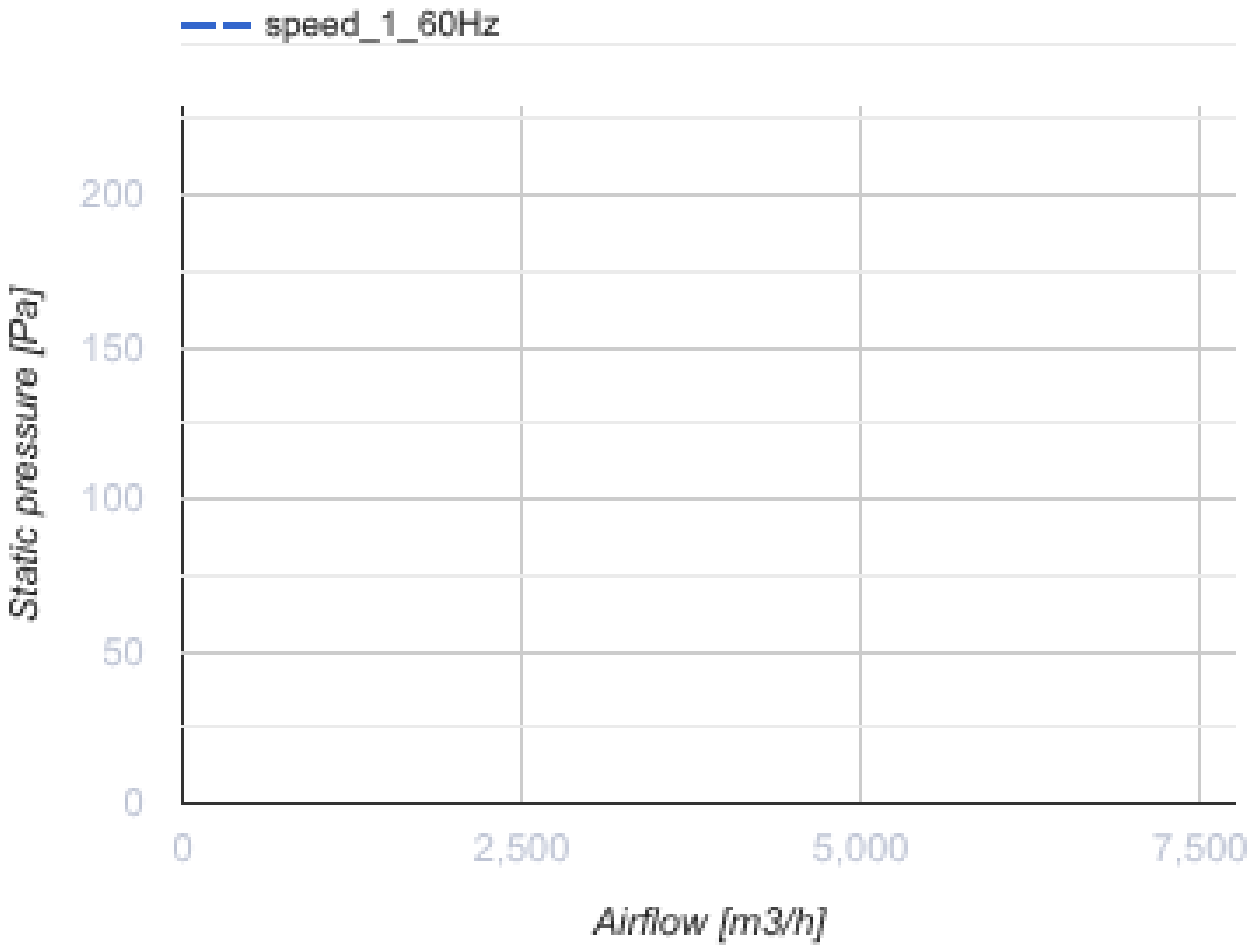
speed_1_60Hz
200
150
100
50
0
Static pressure [Pa]
0
2,500
5,000
7,500
Airflow [m3/h]

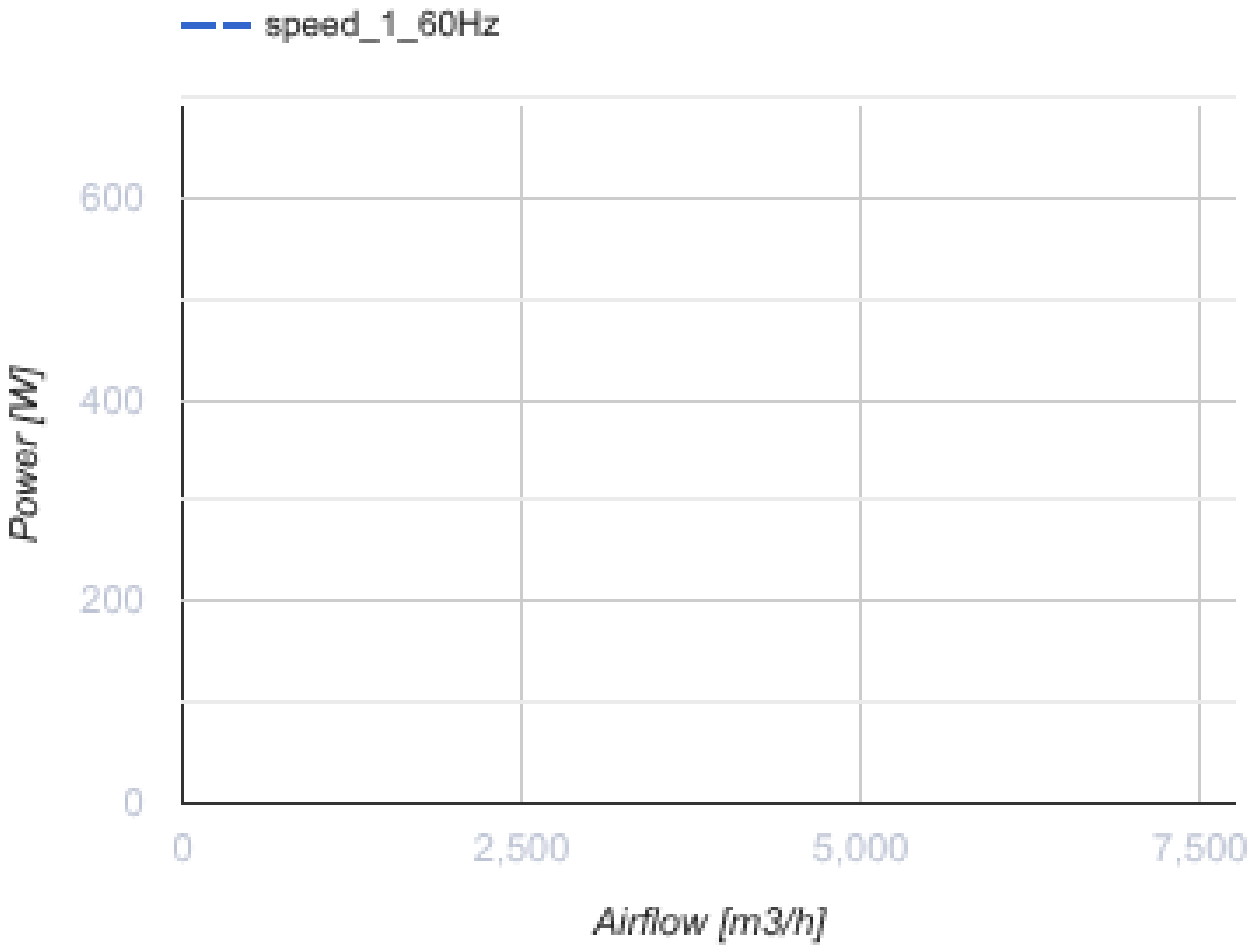

Dimensions

ØD	Ød	B	B1	L
570	11	725	675	260

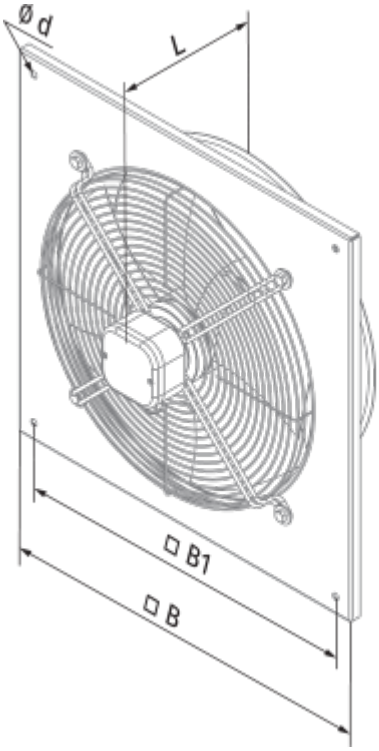
Ø d
L
□ B1
□ B

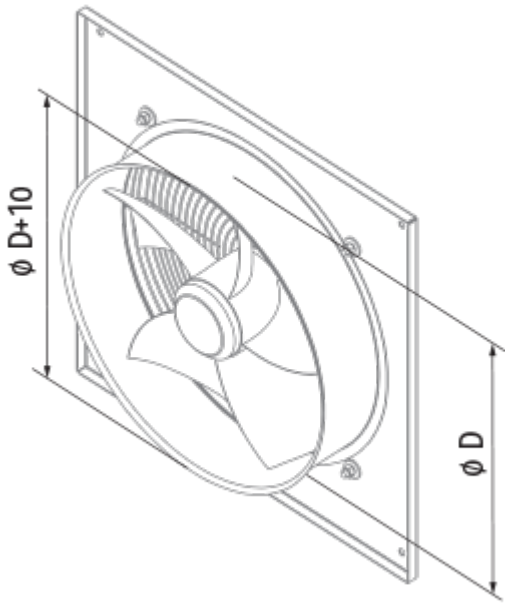
ø D+10
ø D