

Axis-QR 300 4D

Wall-mounted axial fans

- Impeller type: Axial
- Casing material: Coated steel
- Installation in any position

	Unit of measurement	Axis-QR 300 4D	
Phases	-	3	
Minimum supply voltage	V	400	
Maximum supply voltage	V	400	
Power supply frequency	Hz	50	60
Maximum airflow	m³/h	1310	
Weight	kg	5.1	
Transported air temperature (max)	°C	60	
Transported air temperature (min)	°C	-30	
Ingress protection rating	-	IP24	
Ingress protection rating of the drive	-	IP54	
Impeller material	-	Coated steel	

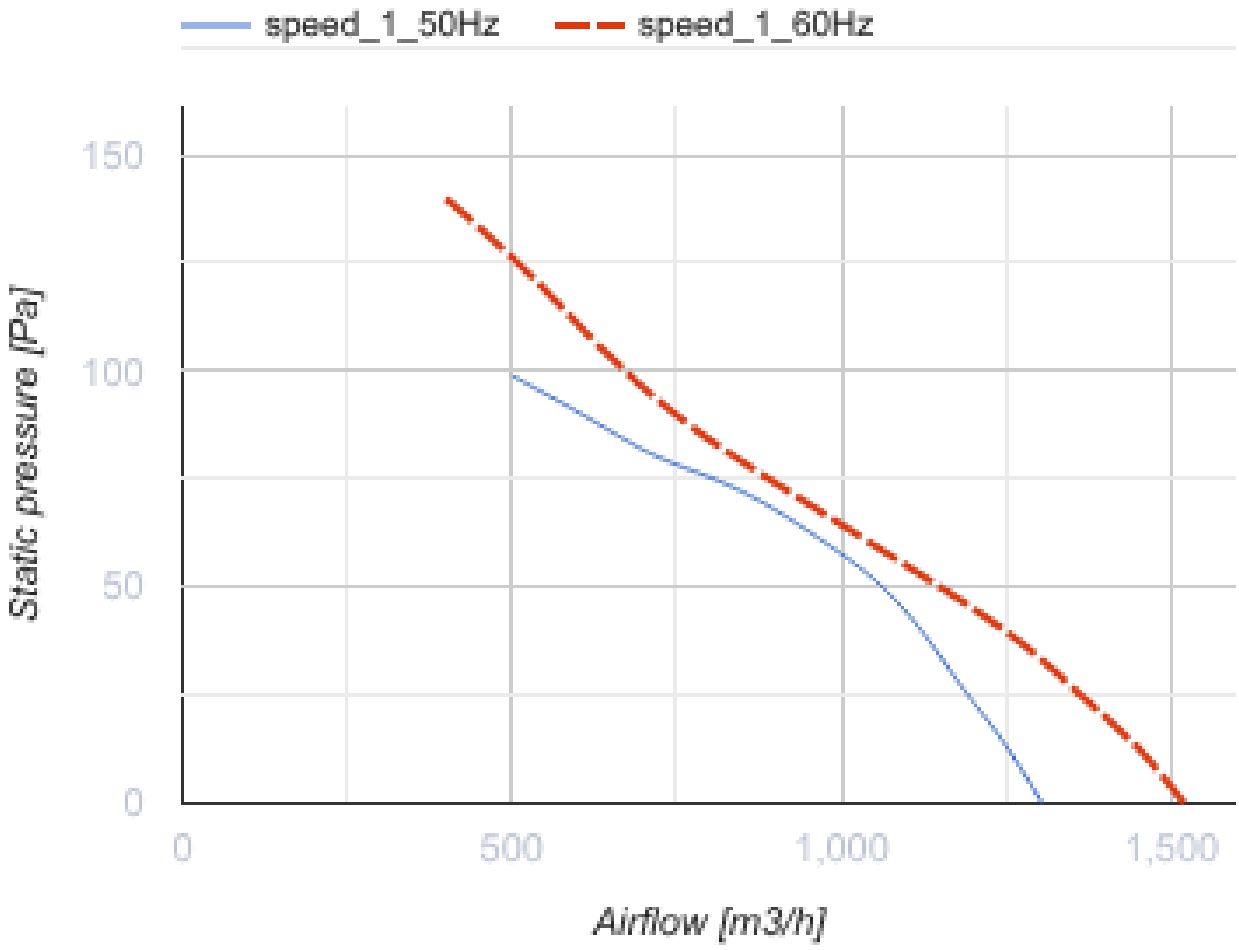
speed_1_50Hz
speed_1_60Hz
150
100
50
0
Static pressure [Pa]
0
500
1,000
1,500
Airflow [m3/h]

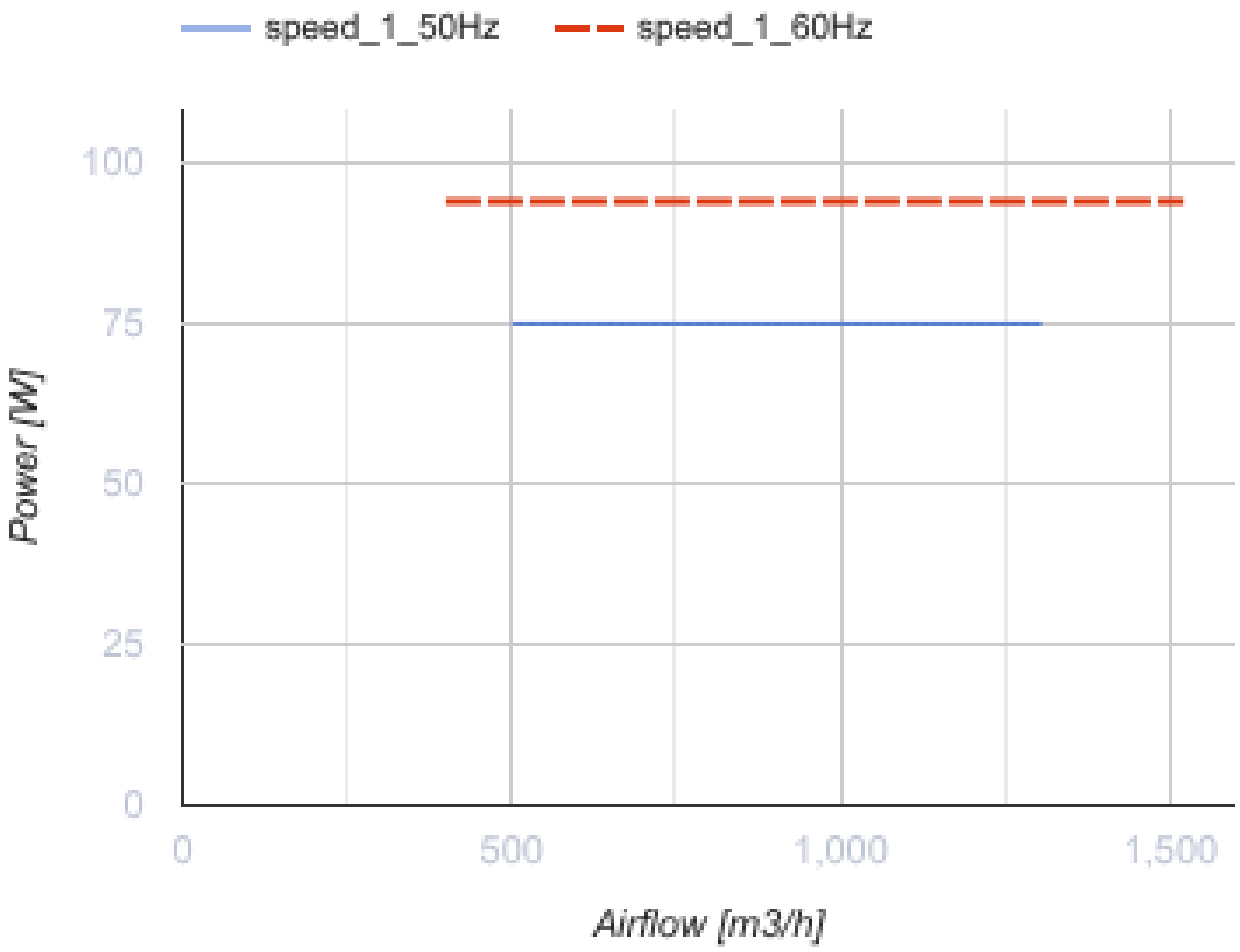

Dimensions

ØD	ØD1	ØD2	Ød	L
317	380	397	9	145

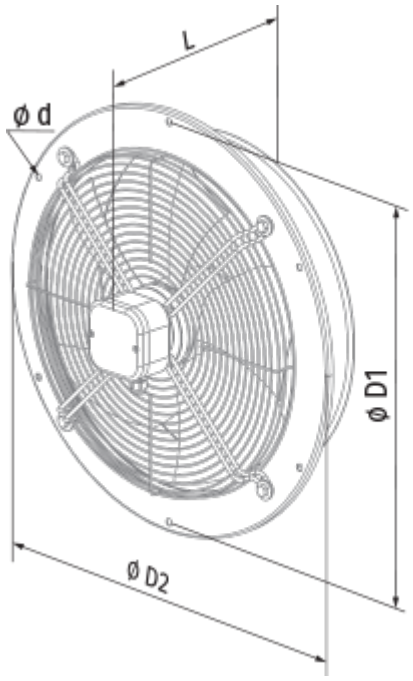
L
ø d
ø D1
ø D2

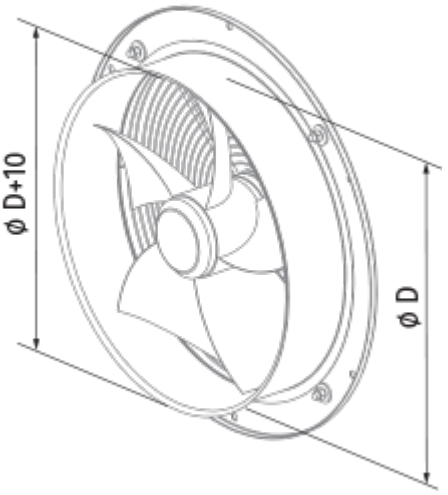
ø D+10
ø D

Ecodesign

Trademark	Blauberg
Model	Axis-QR 300 4D
Type of drive installed	External MSD or VSD
Type of heat recovery system	None
Nominal external pressure (Pa)	70
Maximum external leakage rates (%)	2.7
Static efficiency (%)	18.4
Declared typology	NRVU UVU
Effective electric power input (kW)	0.094
Sound power level (dB(A))	78

Accessories

Thyristor speed controllers

Name	Photo	Description
CDT E1.8		Thyristor speed controller