

# Axis-QR 450 6D

Wall-mounted axial fans

- Impeller type: Axial
- Casing material: Coated steel
- Installation in any position

| | Unit of measurement | Axis-QR 450 6D |
|---|---|---|
| Phases | - | 3 |
| Minimum supply voltage | V | 400 |
| Maximum supply voltage | V | 400 |
| Power supply frequency | Hz | 50 |
| Maximum airflow | m³/h | 3500 |
| Weight | kg | 10 |
| Transported air temperature (max) | °C | 60 |
| Transported air temperature (min) | °C | -30 |
| Ingress protection rating | - | IP24 |
| Ingress protection rating of the drive | - | IP54 |
| Impeller material | - | Coated steel |

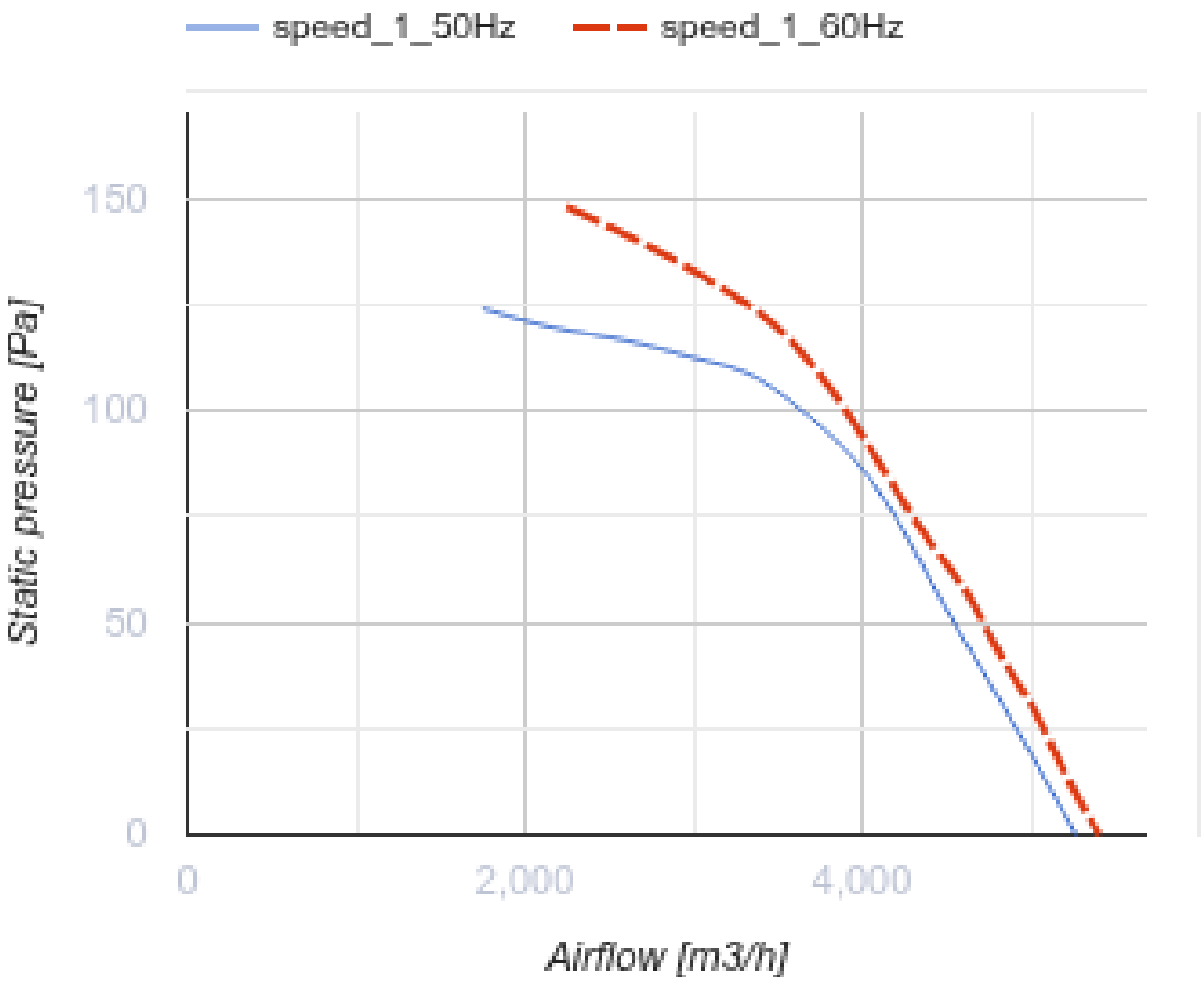
speed_1_50Hz
speed_1_60Hz
150
100
50
0
Static pressure [Pa]
0
2,000
4,000
Airflow [m3/h]

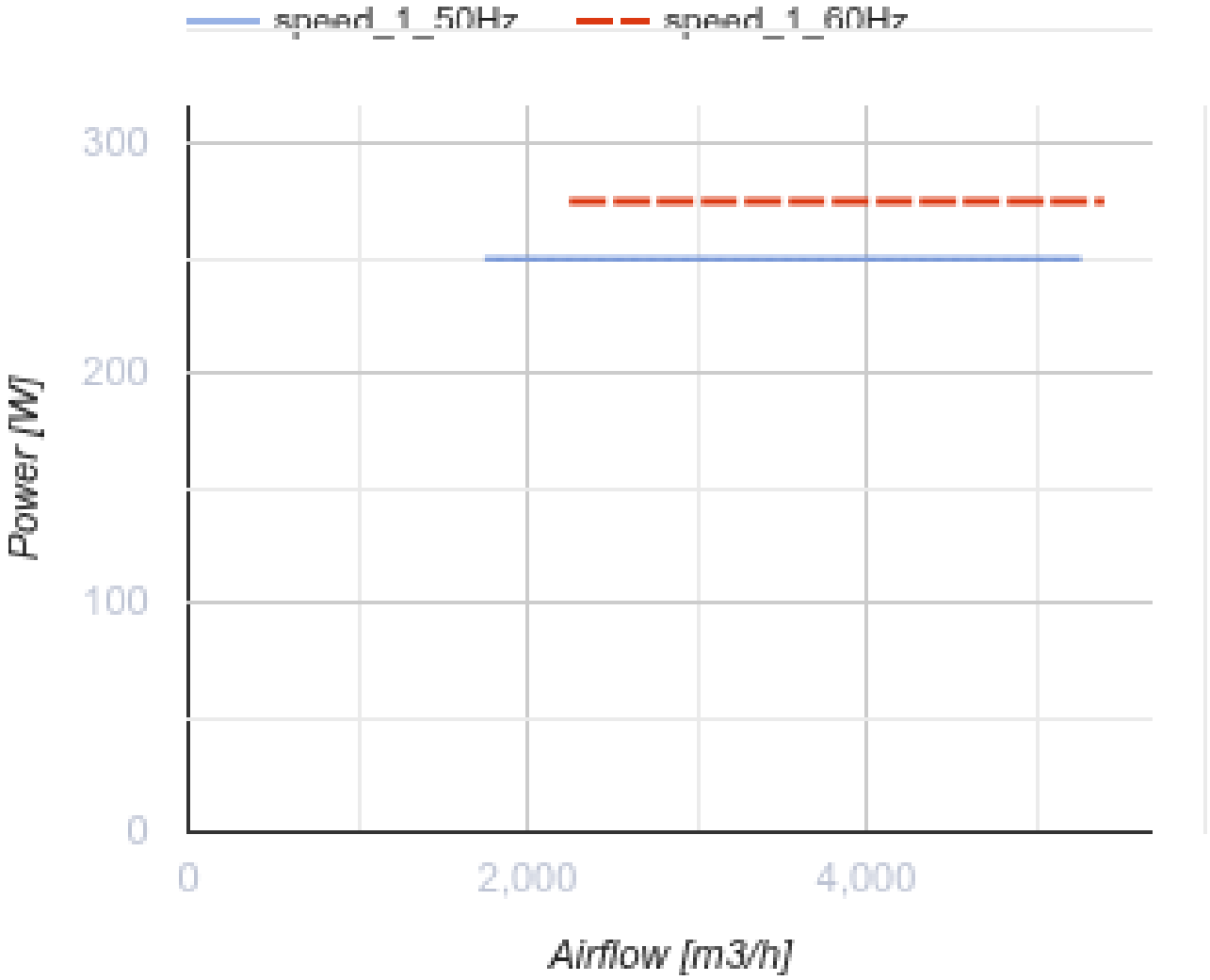


## Dimensions

| ØD | ØD1 | ØD2 | Ød | L |
|---|---|---|---|---|
| 465 | 578 | 607 | 11 | 230 |

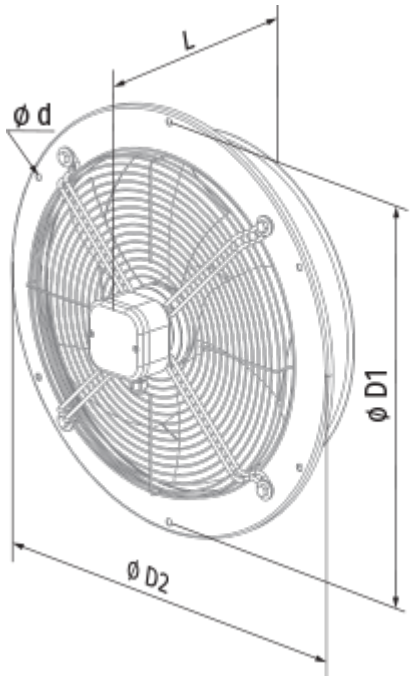
L
ø d
ø D1
ø D2

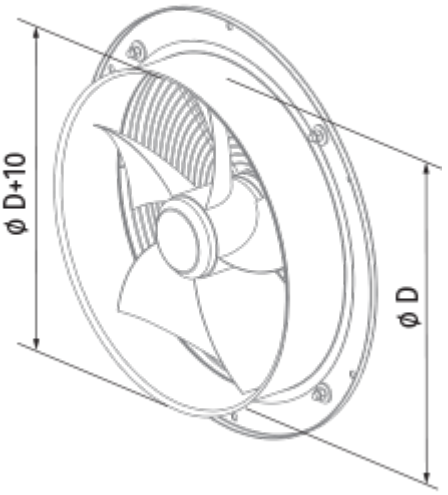
ø D+10
ø D

## Ecodesign

| | |
|---|---|
| Trademark | Blauberg |
| Model | Axis-QR 450 6D |
| Type of drive installed | External MSD or VSD |
| Type of heat recovery system | None |
| Nominal external pressure (Pa) | 100 |
| Maximum external leakage rates (%) | 2.7 |
| Static efficiency (%) | 35 |
| Declared typology | NRVU UVU |
| Effective electric power input (kW) | 0.296 |
| Sound power level (dB(A)) | 85 |