

Axis-QR 630 4D

Wall-mounted axial fans

- Impeller type: Axial
- Casing material: Coated steel
- Installation in any position

	Unit of measurement	Axis-QR 630 4D
Phases	-	3
Minimum supply voltage	V	400
Maximum supply voltage	V	400
Power supply frequency	Hz	50
Maximum airflow	m³/h	12200
Weight	kg	20
Transported air temperature (max)	°C	60
Transported air temperature (min)	°C	-30
Ingress protection rating	-	IP24
Ingress protection rating of the drive	-	IP54
Impeller material	-	Coated steel

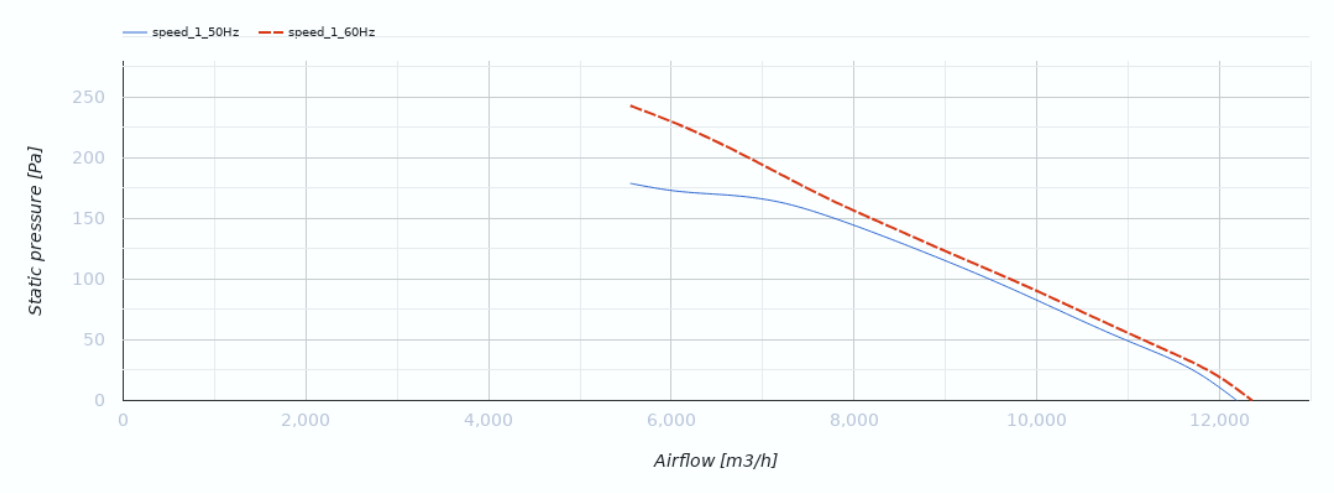
speed_1_50Hz
speed_1_60Hz
Static pressure [Pa]
250
200
150
100
50
0
0
2,000
4,000
6,000
8,000
10,000
12,000
Airflow [m3/h]

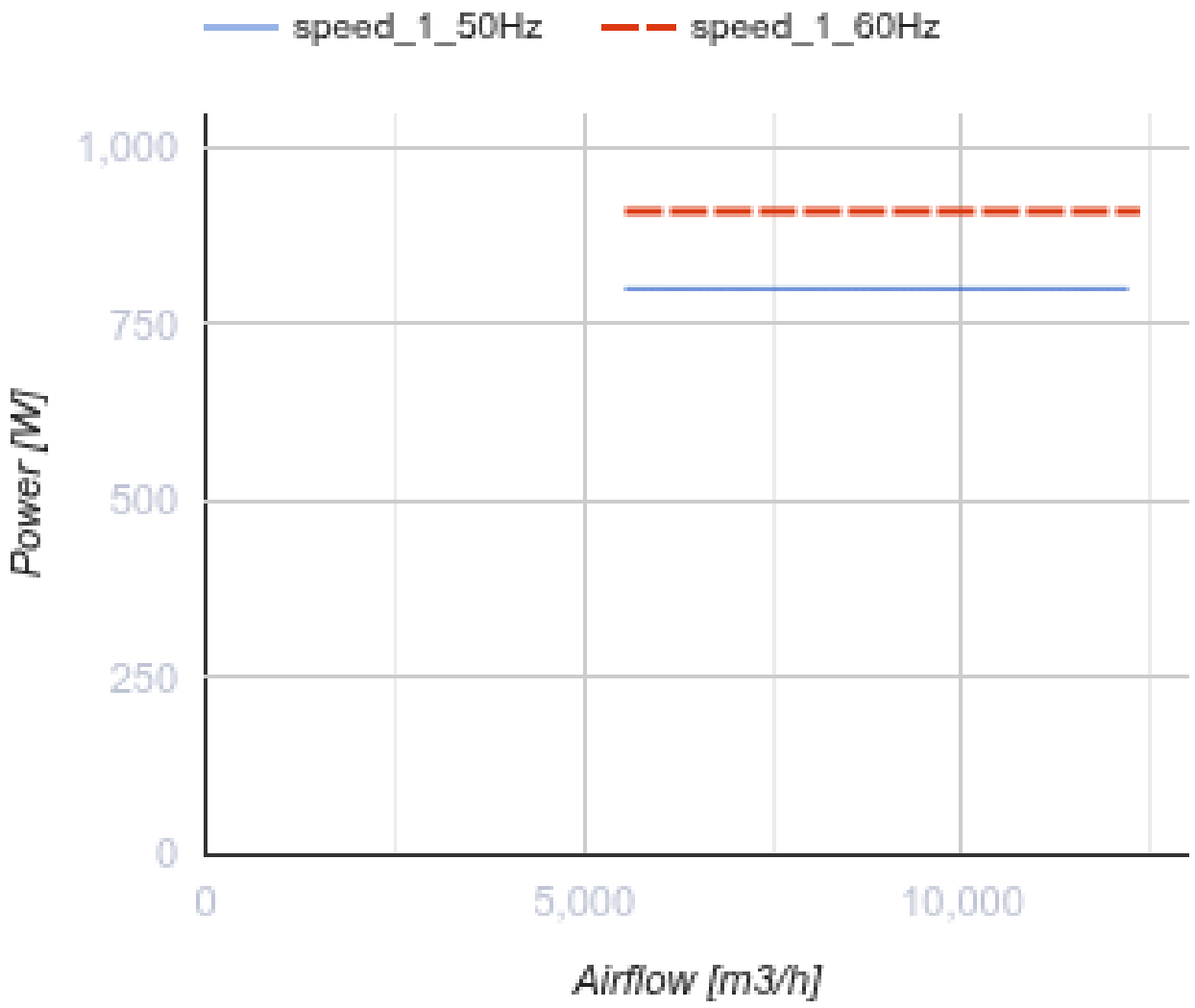
speed_1_50Hz
speed_1_60Hz
Power [W]
1,000
750
500
250
0
0
5,000
10,000
Airflow [m3/h]

Dimensions

ØD	ØD1	ØD2	Ød	L
650	760	800	11	275

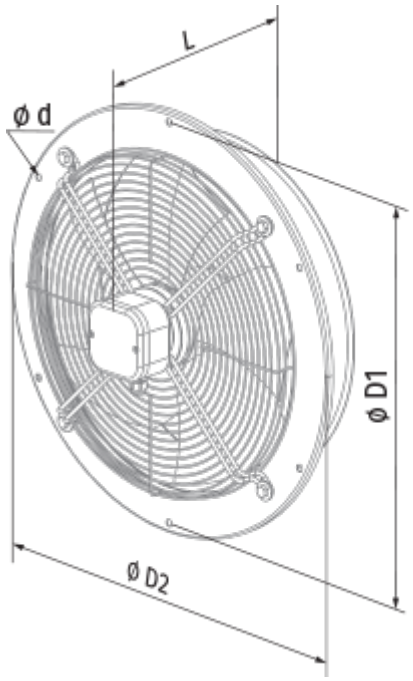

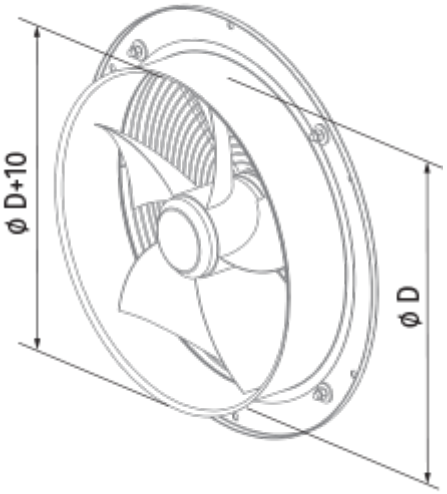

Ecodesign

Trademark	Blauberg
Model	Axis-QR 630 4D
Type of drive installed	External MSD or VSD
Type of heat recovery system	None
Nominal external pressure (Pa)	152
Maximum external leakage rates (%)	2.7
Static efficiency (%)	41.2
Declared typology	NRVU UVU
Effective electric power input (kW)	0.81
Sound power level (dB(A))	98

Accessories

Thyristor speed controllers

Name	Photo	Description
CDT E1.8		Thyristor speed controller