

Belimo LM24A

Electric actuators

	Unit of measurement	Belimo LM24A
Minimum supply voltage	V	24
Maximum supply voltage	V	24
Power supply frequency	Hz	50/60
Weight	kg	0.6
Ambient air temperature min	°C	-30
Ambient air temperature max	°C	50
Ingress protection rating	-	IP54

Dimensions

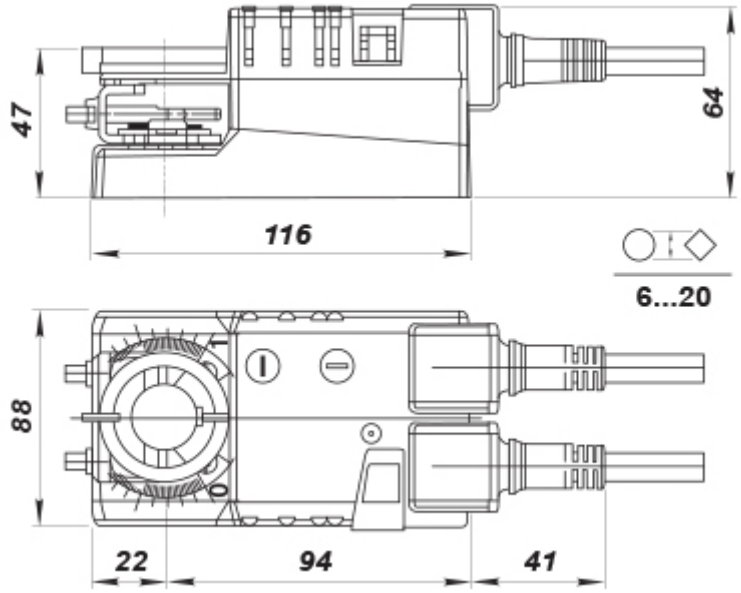
47
64
116
6...20
88
22
94
41