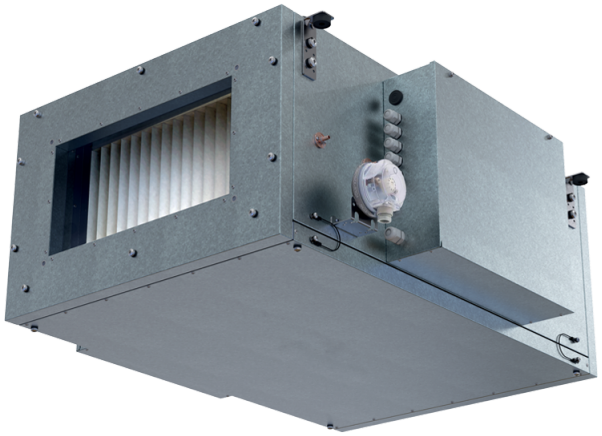

Blaubox EC ME 2000-12 S31

Supply ventilation units with an electric heater

- Power of electrical reheater: 12000
- Sound-insulated casing
- Reheater: Electric
- BMS protocol: ModBus
- Control: Wired control panel
- Casing material: Aluzinc steel

	Unit of measurement	Blaubox EC ME 2000-12 S31
Phases	-	3
Maximum supply voltage	V	400
Minimum supply voltage	V	400
Power supply frequency	Hz	50
Power of electrical reheater	W	12000
Maximum airflow	m^3/h	2450
Weight	kg	40
Transported air temperature (max)	°C	40
Transported air temperature (min)	°C	-30
Ingress protection rating	-	IP22
Ingress protection rating of the drive	-	IP44

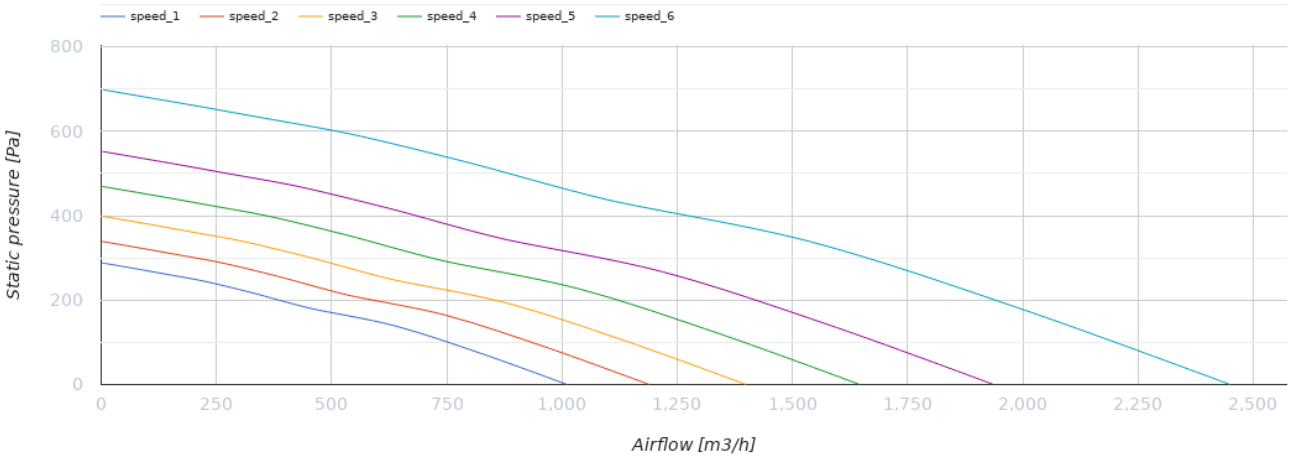

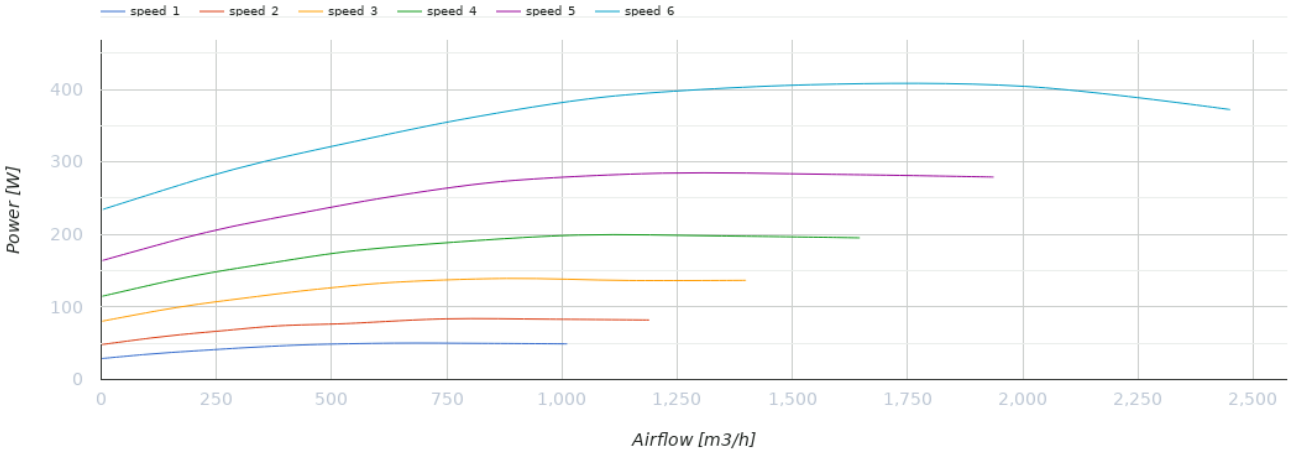

Dimensions

H	H1	L	L1	W	W1	W2	W3
440	300	900	770	700	754	847	500

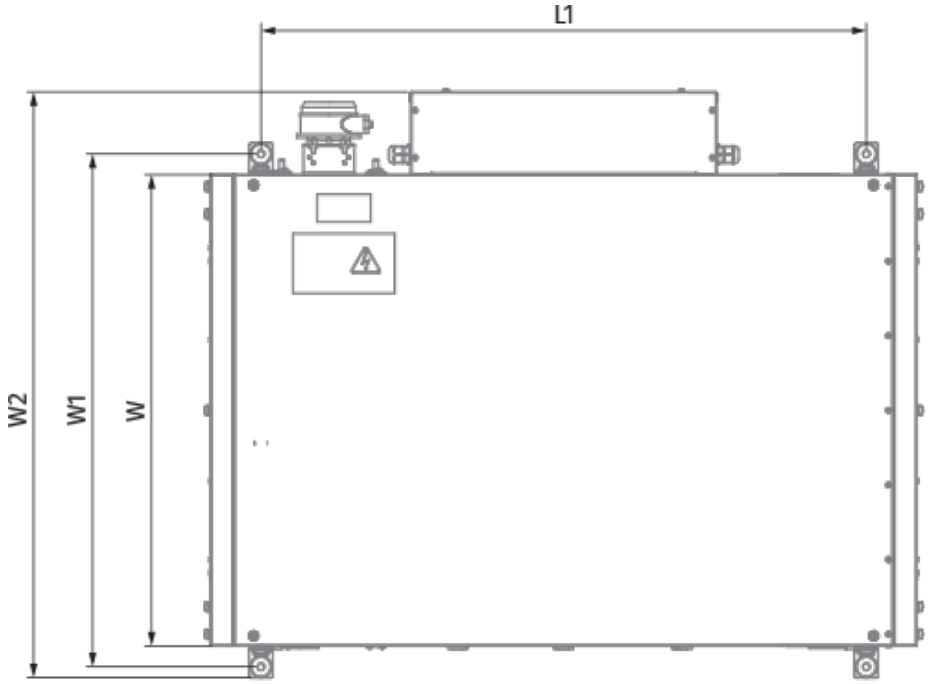
L1
W2
W1
W

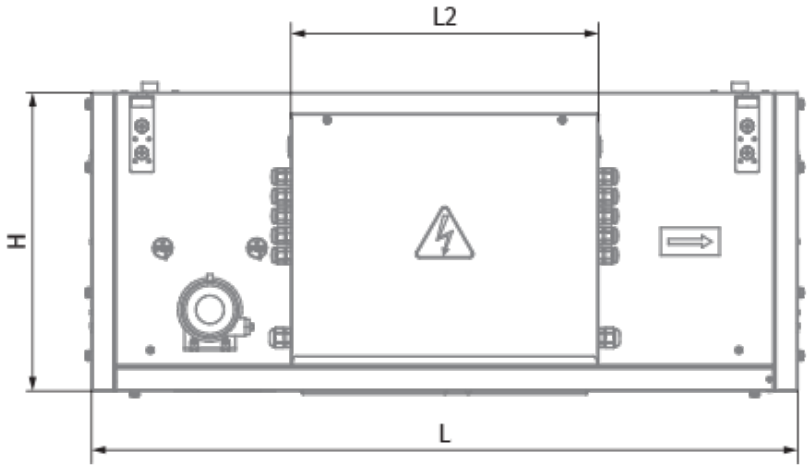
L2
H
L

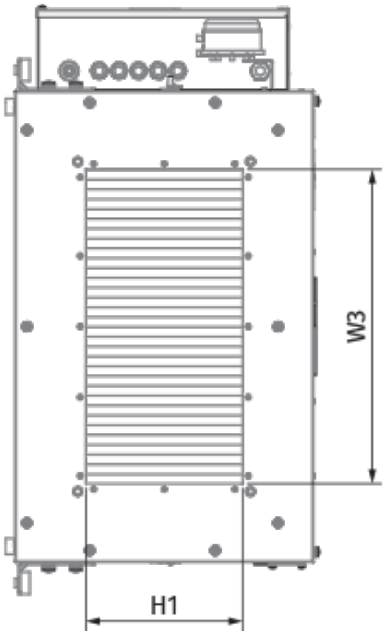
W3
H1

Ecodesign

Trademark	Blauberg
Model	Blaubox EC ME 2000-12 S31
Type of drive installed	Integrated VSD
Type of heat recovery system	None
Nominal external pressure (Pa)	300
Maximum external leakage rates (%)	4
Static efficiency (%)	41.1
Effective electric power input (kW)	0.37
Face velocity at design flow rate (m/s)	1.857
Sound power level (dB(A))	64
Declared typology	NRVU UVU
Energy performance of filters	B

Accessories

For rectangular ducts

Name	Photo	Description
SD 50x30	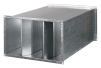	Silencers for rectangular ducts

For rectangular ducts

Name	Photo	Description
EVA 50x30		Flexible anti-vibration connectors for rectangular ducts

Airflow regulators

Name	Photo	Description
SL 50x30		Air dampers for rectangular ducts

Other accessories

Name	Photo	Description
FP 636x376x48 ePM1 70% / F7		F7 panel filter
FP 636x376x48 Coarse 90% / G4		G4 panel filter

Electric actuators

Name	Photo	Description
Belimo TF24		Electric actuators
Belimo TF230		Electric actuators