

# BLAUBOX MW 1800-4 Pro

Supply ventilation units

- Sound-insulated casing
- Reheater: Water
- Control: Remote Control
- Casing material: Galvanized steel

| | Unit of measurement | BLAUBOX MW 1800-4 Pro |
|---|---|---|
| Phases | - | 1 |
| Minimum supply voltage | V | 230 |
| Maximum supply voltage | V | 230 |
| Power supply frequency | Hz | 50 |
| Maximum airflow | m³/h | 1870 |
| Weight | kg | 62.5 |
| Transported air temperature (max) | °C | 45 |
| Transported air temperature (min) | °C | -40 |
| Ambient air temperature min | °C | 1 |
| Ambient air temperature max | °C | 40 |
| Ingress protection rating | - | IP22 |
| Ambient air humidity max | % | 80 |
| Ingress protection rating of the drive | - | IP44 |

## Dimensions

| B | B2 | B3 | H | H1 | L |
|---|---|---|---|---|---|
| 600 | 775 | 500 | 480 | 250 | 800 |

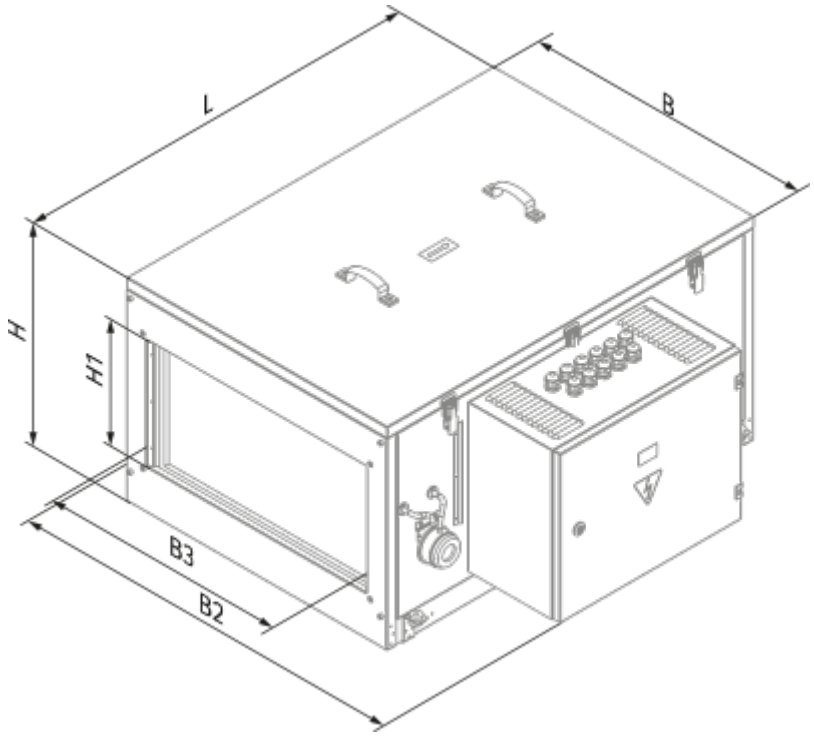


## Accessories

### For rectangular ducts

| Name | Photo | Description |
|---|---|---|
| SD 50x25 | 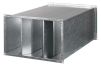 | Silencers for rectangular ducts |

### For rectangular ducts

| Name | Photo | Description |
|---|---|---|
| EVA 50x25 |  | Flexible anti-vibration connectors for rectangular ducts |

### Water coolers

| Name | Photo | Description |
|---|---|---|
| KWK 50x25-3 |  | Duct water cooling units for rectangular air ducts |

### Freon coolers

| Name | Photo | Description |
|---|---|---|

| | | |
|---|---|---|
| KFK 50x25-3 |  | Duct DX cooling units for rectangular air ducts |

### Mixing chambers

| Name | Photo | Description |
|---|---|---|
| WMG 3/4-4 |  | Water mixing units |
| WMG 3/4-6 |  | Water mixing units |
| WMG 1-6 |  | Water mixing units |
| WMG 1-10 |  | Water mixing units |
| WMG 1 1/4-10 |  | Water mixing units |
| WMG 1 1/4-16 |  | Water mixing units |
| WMG 1 1/2-16 |  | Water mixing units |
| WMG 1 1/2-25 |  | Water mixing units |
| WMG 2-25 |  | Water mixing units |
| WMG 2-40 |  | Water mixing units |

### Airflow regulators

| Name | Photo | Description |
|---|---|---|
| SL 50x25 |  | Air dampers for rectangular ducts |

### Other accessories

| Name | Photo | Description |
|---|---|---|
| FP 545x390x47 G4 |  | G4 panel filter |