

BLAUBOX MW 3200-4 Pro

Supply ventilation units

- Sound-insulated casing
- Reheater: Water
- Control: Remote Control
- Casing material: Galvanized steel

	Unit of measurement	BLAUBOX MW 3200-4 Pro
Phases	-	3
Connection type	-	Y
Maximum supply voltage	V	400
Minimum supply voltage	V	400
Power supply frequency	Hz	50
Maximum airflow	m³/h	3250
Weight	kg	73.1
Transported air temperature (max)	°C	45
Transported air temperature (min)	°C	-40
Ambient air temperature max	°C	40
Ambient air temperature min	°C	1
Ingress protection rating	-	IP22
Ingress protection rating of the drive	-	IP44
Ambient air humidity max	%	80

Dimensions

B	B2	B3	H	H1	L
710	1000	600	530	350	1000

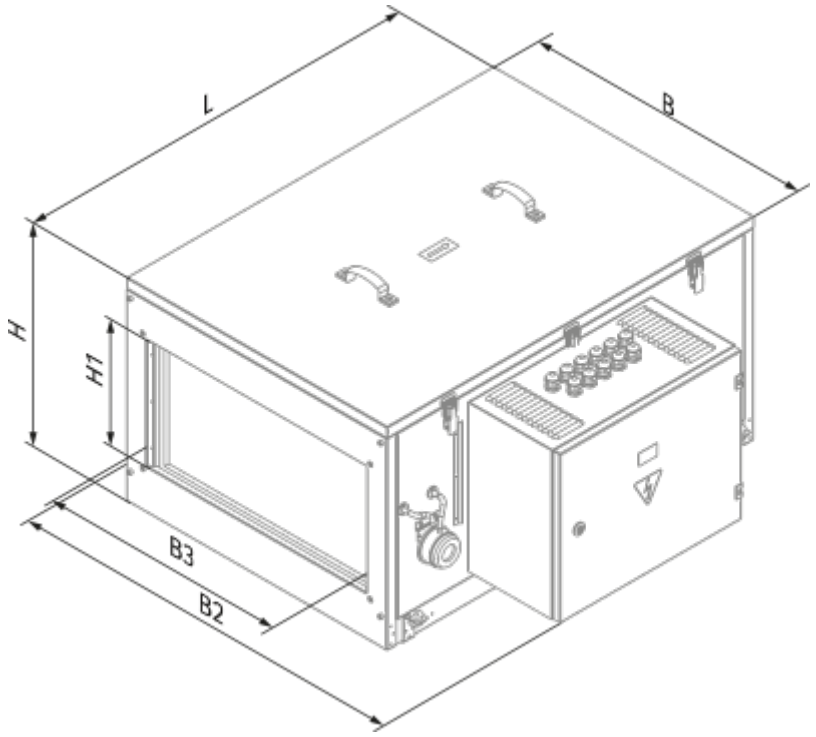

Accessories

For rectangular ducts

Name	Photo	Description
SD 60x35	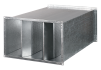	Silencers for rectangular ducts

Water coolers

Name	Photo	Description
KWK 60x35-3		Duct water cooling units for rectangular air ducts

Freon coolers

Name	Photo	Description
KFK 60x35-3		Duct DX cooling units for rectangular air ducts

Mixing chambers

Name	Photo	Description

WMG 3/4-4		Water mixing units
WMG 3/4-6		Water mixing units
WMG 1-6		Water mixing units
WMG 1-10		Water mixing units
WMG 1 1/4-10		Water mixing units
WMG 1 1/4-16		Water mixing units
WMG 1 1/2-16		Water mixing units
WMG 1 1/2-25		Water mixing units
WMG 2-25		Water mixing units
WMG 2-40		Water mixing units

Other accessories

Name	Photo	Description
FP 653x440x47 G4		G4 panel filter