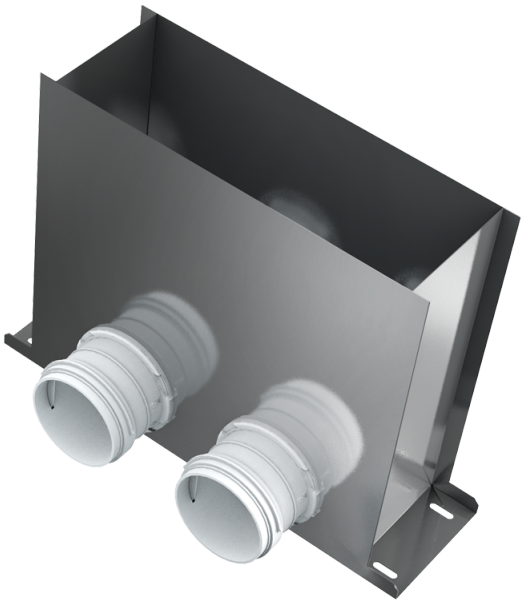

BlauFast RPF 300x100/63x2 M

For supply and exhaust systems in residential premises. Connecting the ventilation grille to ∅ 63 mm ducts

• Casing material: Metal

	Unit of measurement	BlauFast RPF 300x100/63x2 M

Dimensions

∅ D	H	L	W
72	300	401	115

