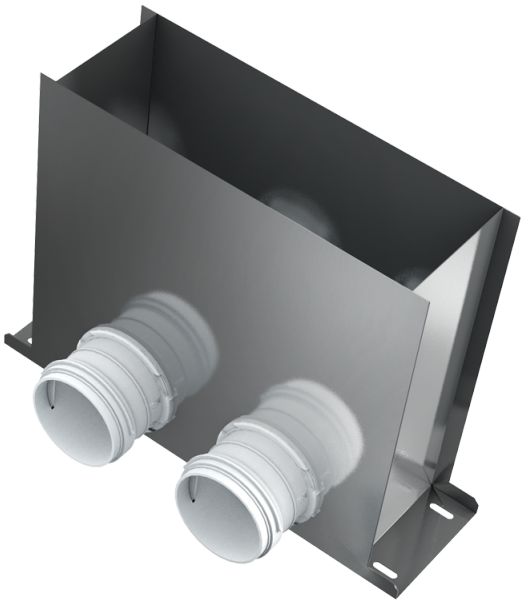

BlauFast RPF 300x100/75x2 M

For supply and exhaust systems in residential premises. Connecting the ventilation grille to ∅ 75 mm ducts

- Casing material: Metal

	Unit of measurement	BlauFast RPF 300x100/75x2 M

Dimensions

∅ D	H	L	W
84	300	401	115

