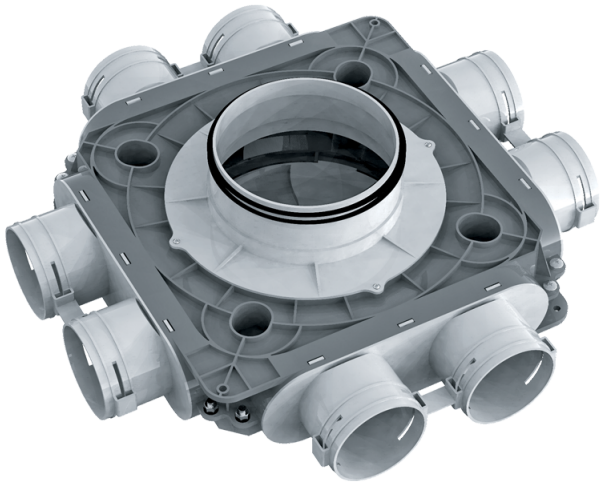

BlauFast SR 150/75x8 50P

Supply or exhaust ventilation systems of residential spaces. For distribution of air from the ventilation unit through the air ducts

- Casing material: Polypropylene

	Unit of measurement	BlauFast SR 150/75x8 50P
Ambient air temperature min	°C	-20
Ambient air temperature max	°C	60

Dimensions

Ø d	H	L
138	140	468

