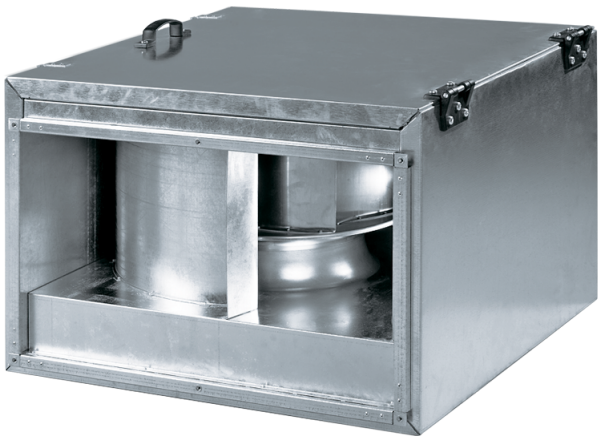

Box-I 60x35 4E

Centrifugal inline fans with backward curved blades in sound-insulated casings

- Sound-insulated casing
- Impeller type: Centrifugal impeller with backward curved blades
- Casing material: Galvanized steel
- Installation in any position

	Unit of measurement	Box-I 60x35 4E
Phases	-	1
Maximum supply voltage	V	240
Minimum supply voltage	V	220
Power supply frequency	Hz	50/60
Maximum airflow	m³/h	2950
Weight	kg	56.2
Transported air temperature (max)	°C	80
Transported air temperature (min)	°C	-30
Ingress protection rating	-	IPX4
Ingress protection rating of the drive	-	IP44
Impeller material	-	Aluminium

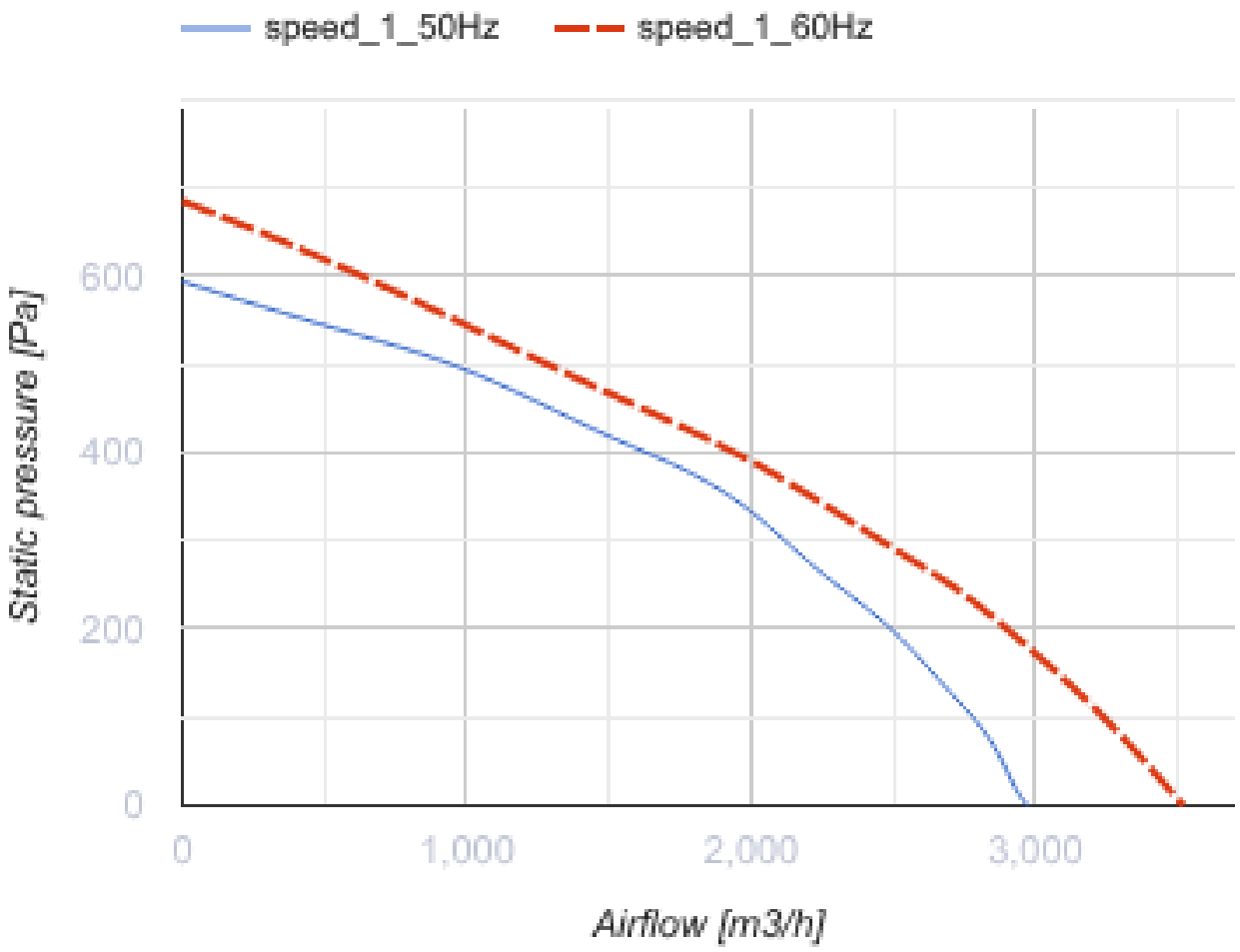
speed_1_50Hz
speed_1_60Hz
Static pressure [Pa]
600
400
200
0
0
1,000
2,000
3,000
Airflow [m3/h]

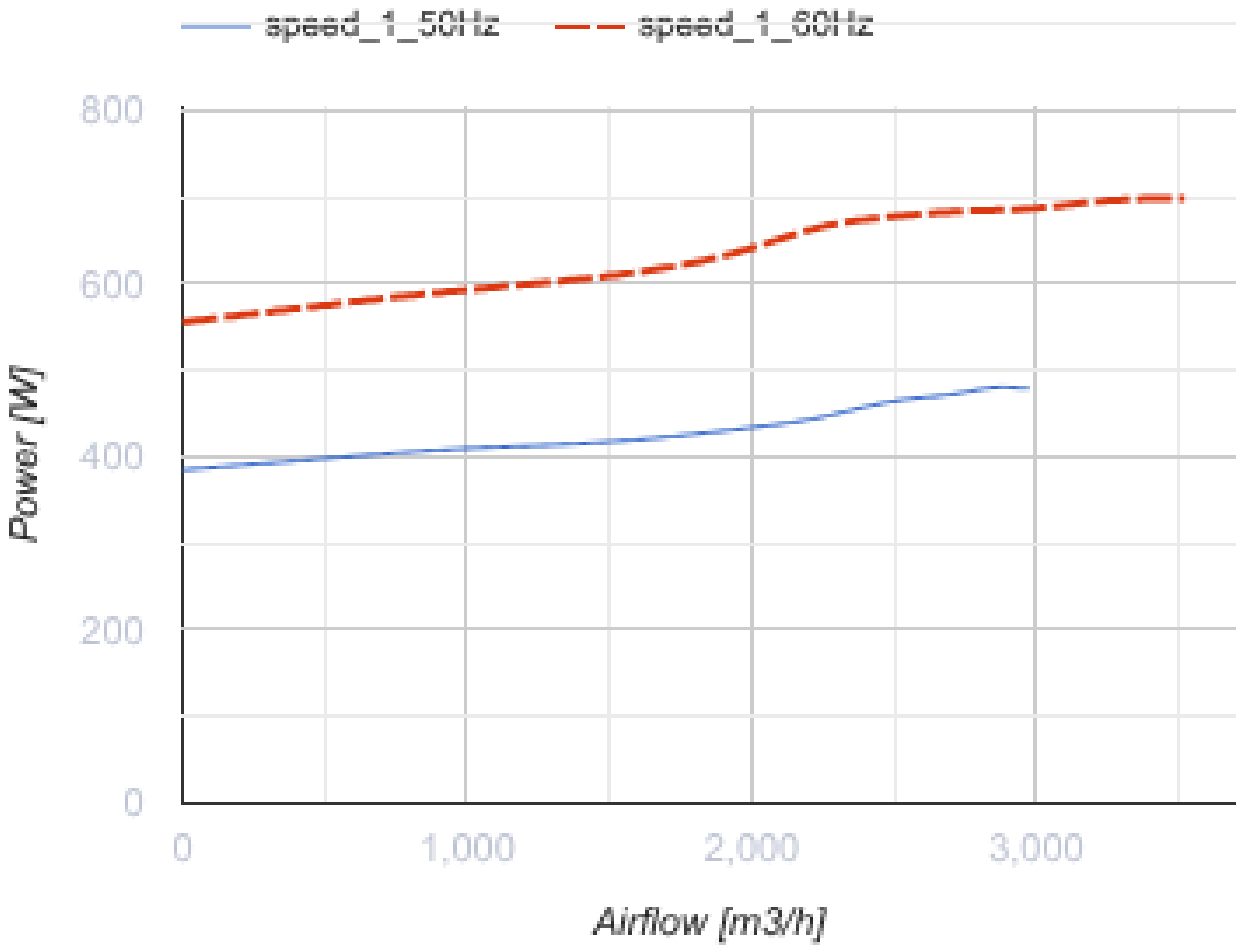

Dimensions

B	B1	B2	B3	H	H1	H2	H3	L
600	620	640	700	350	370	390	530	735

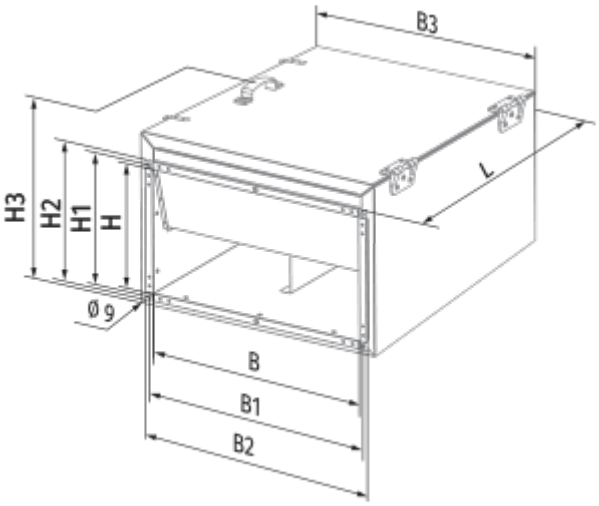
B3
L
H3
H2
H1
H
Ø 9
B
B1
B2

Ecodesign

Trademark	Blauberg
Model	Box-I 60x35 4E
Type of ventilation unit	Unidirectional
Type of drive installed	External MSD or VSD
Type of heat recovery system	None
Nominal external pressure (Pa)	335
Maximum external leakage rates (%)	2.7
Static efficiency (%)	43.7
Sound power level (dB(A))	79
Effective electric power input (kW)	0.43
Declared typology	NRVU UVU