

Box-R 125 V2

Centrifugal inline fans

• Impeller type: Centrifugal impeller with backward curved blades
• Casing material: Coated steel
• Installation in any position

	Unit of measurement	Box-R 125 V2	
Speed	-	1	2
Phases	-	1	
Minimum supply voltage	V	230	
Maximum supply voltage	V	230	
Power supply frequency	Hz	50	
Maximum airflow	m³/h	220	300
Weight	kg	6	
Transported air temperature (max)	°C	50	
Ingress protection rating	-	IPX4	
Ingress protection rating of the drive	-	IP44	
Impeller material	-	Plastic	

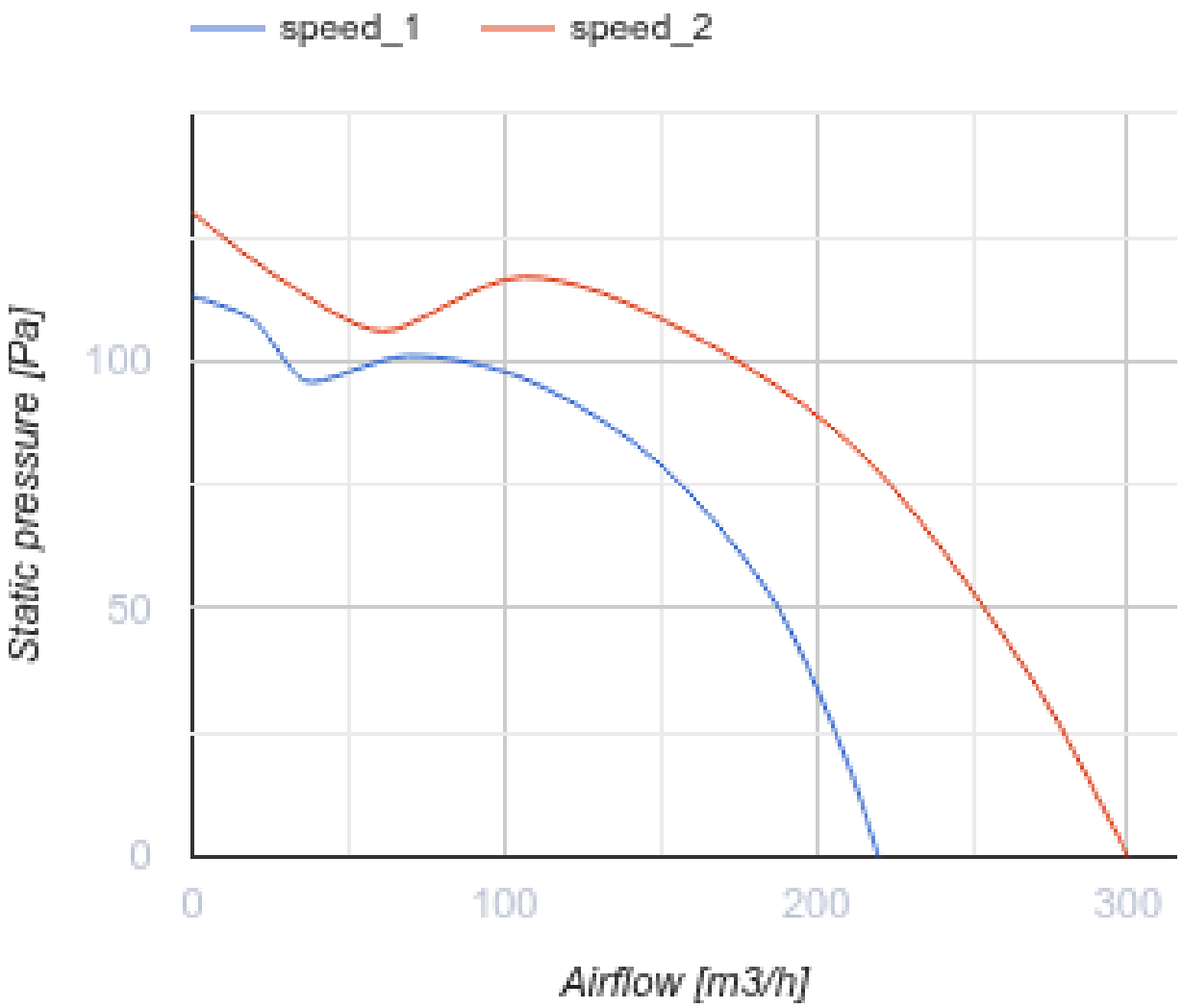
speed_1
speed_2
Static pressure [Pa]
100
50
0
0
100
200
300
Airflow [m3/h]

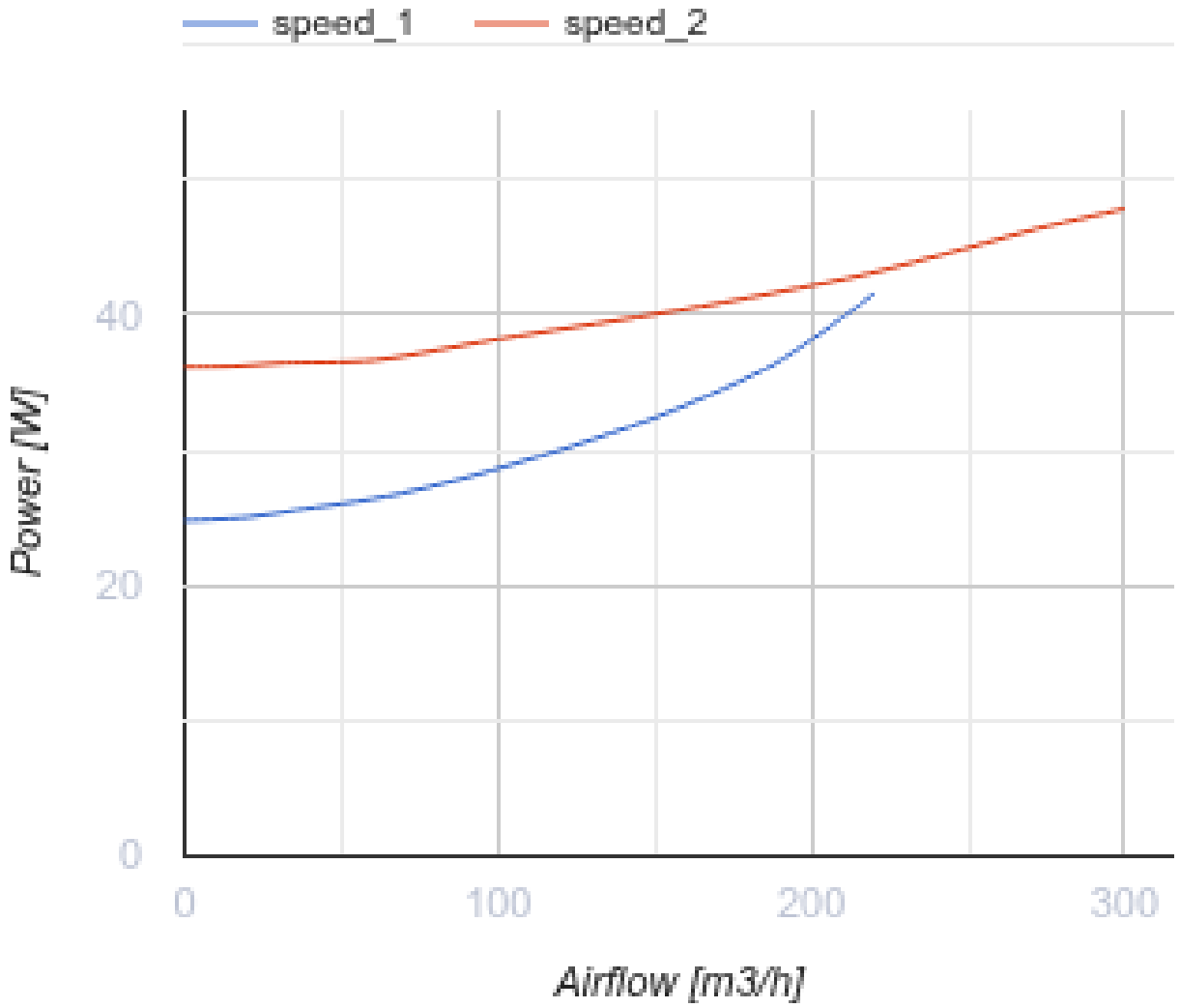

Dimensions

ØD	ØD1	B	H	L	L2
124	124	303	152	430	330

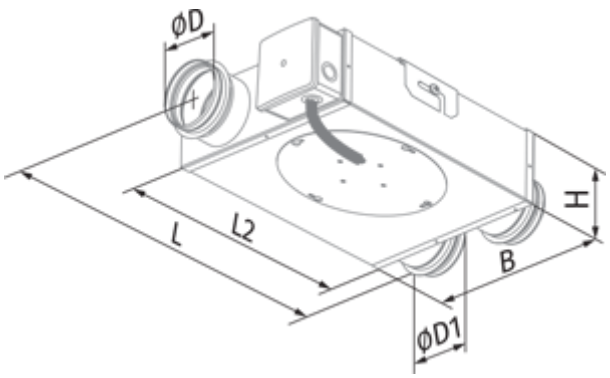

Ecodesign

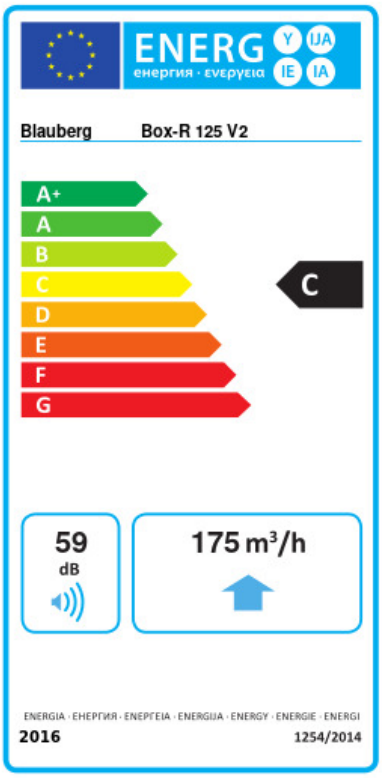

Trademark	Blauberg					
Model	Box-R 125 V2					
Specific energy consumption (SEC) (kWh/(m²/a))	Cold		Average		Warm	
	-52	A+	-25	C	-9.4	F
Type of ventilation unit	Unidirectional					
Type of drive installed	Variable speed					
Type of heat recovery system	None					
Maximum flow rate (m³/h)	175					
Electric power input (W)	43					
Reference flow rate (m³/s)	0.034					
Reference pressure difference (Pa)	50					
Specific power input (SPI) (W/(m³/h))	0.253					
Control typology	Local demand control					
Maximum external leakage rates (%)	2.7					
Declared typology	RVU UVU					
Sound power level (dB(A))	59					
The annual electricity consumption (AEC) (kWh/a)	Cold		Average		Warm	
	134		134		134	
The annual heating saved (AHS) (kWh/a)	Cold		Average		Warm	
	5536		2830		1280	

Accessories

Speed control switches

Name	Photo	Description
CDP-2/5		Multi-speed switch
CDP-3/5		Multi-speed switch

Humidity sensors

Name	Photo	Description

HSE / HSI 1.5		Sensors
TE / TI 1.5		Timers
LSE / LSI 1.5		Sensors
IRSE / IRSI 1.5		Sensors

Temperature controllers

Name	Photo	Description
MLCD E2		Room temperature regulator