

Box-R 80 V3

Centrifugal inline fans

• Impeller type: Centrifugal impeller with backward curved blades
• Casing material: Coated steel
• Installation in any position

	Unit of measurement	Box-R 80 V3		
Speed	-	1	2	3
Phases	-	1		
Minimum supply voltage	V	230		
Maximum supply voltage	V	230		
Power supply frequency	Hz	50		
Maximum airflow	m³/h	88	130	162
Weight	kg	2		
Transported air temperature (max)	°C	50		
Ingress protection rating	-	IPX4		
Ingress protection rating of the drive	-	IP44		
Impeller material	-	Plastic		

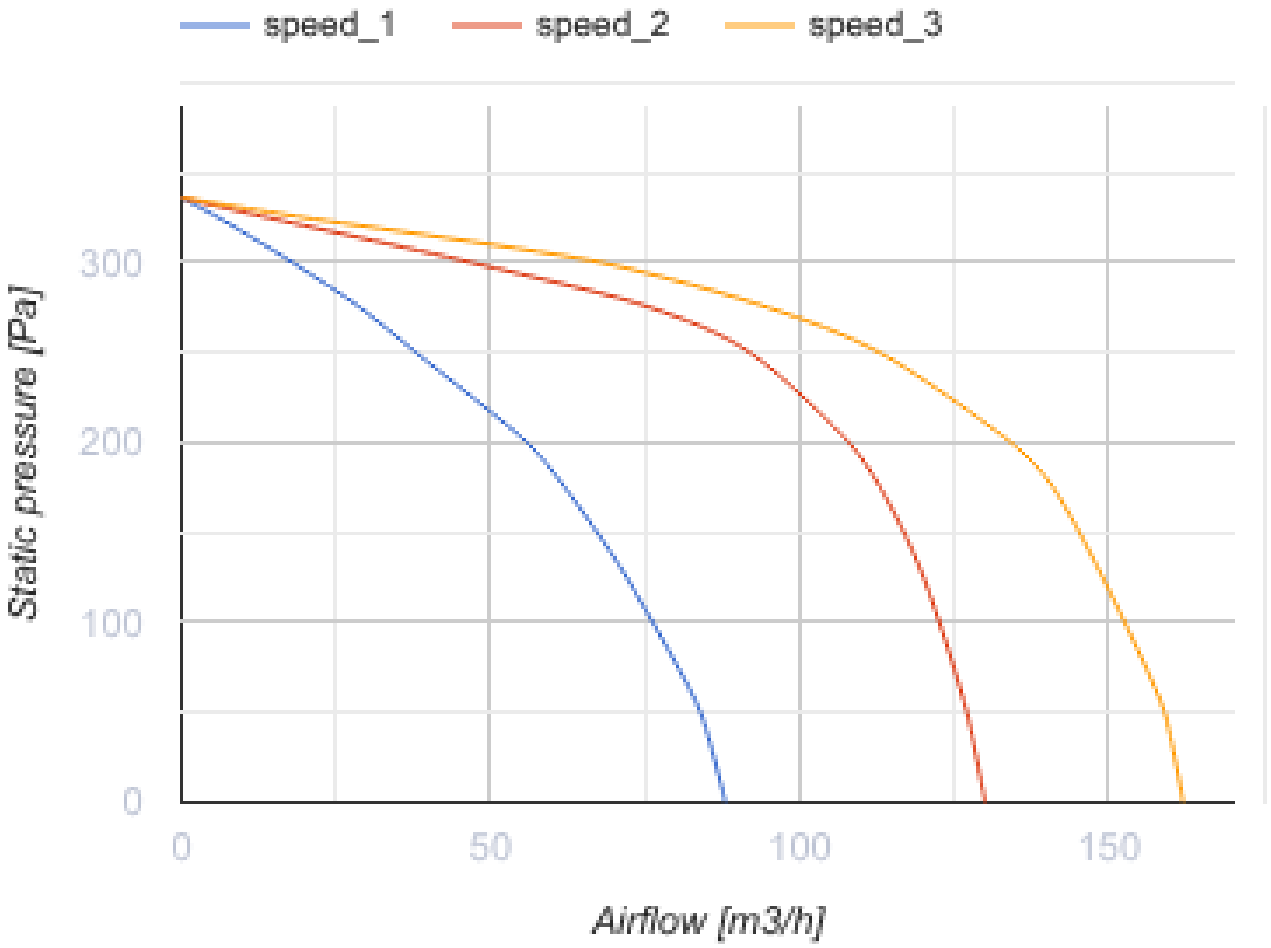

Dimensions

ØD	ØD1	B	H	L	L2
79	79	260	90	352	253

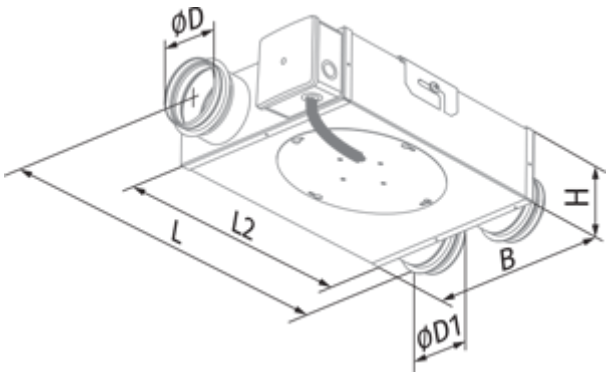

Accessories

Speed control switches

Name	Photo	Description
CDP-2/5		Multi-speed switch
CDP-3/5		Multi-speed switch

Humidity sensors

Name	Photo	Description
HSE / HSI 1.5		Sensors
TE / TI 1.5		Timers
LSE / LSI 1.5		Sensors
IRSE / IRSI 1.5		Sensors

Temperature controllers

Name	Photo	Description
MLCD E2		Room temperature regulator