

Bravo 150 (127-220V/60Hz)

Extract fans

- Backdraft protection: Backdraft damper

	Unit of measurement	Bravo 150 (127-220V/60Hz)
Minimum supply voltage	V	127
Maximum supply voltage	V	220
Power supply frequency	Hz	60
Ingress protection rating	-	IP34
Impeller material	-	Plastic

Dimensions

a	b	c	Ø d	e
205	174	124	150	19

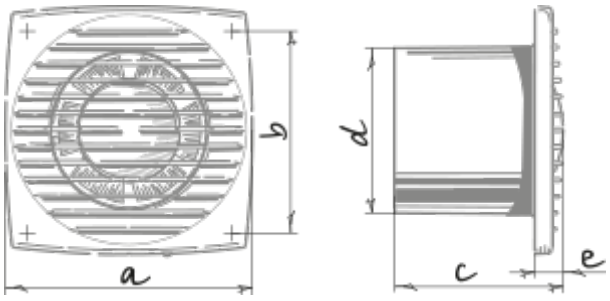

Accessories

Thyristor speed controllers

Name	Photo	Description
CDT E1.8		Thyristor speed controller

Flat duct

Name	Photo	Description
BlauPlast RR 150/1		Round duct
BlauPlast RR 150/1.5		Round duct
BlauPlast RR 150/0.5		Round duct
BlauPlast RR 150/0.35		Round duct
BlauPlast RR 150/2.5		Round duct
BlauPlast RR 150/2		Round duct
BlauPlast RTR 150/0.5-1		Round telescopic duct
BlauPlast RTR 150/0.35-0.5		Round telescopic duct
BlauPlast RSV 150		Flexible duct connector
BlauPlast RB 150/90°		Bend 90°
BlauPlast RRT 150		T-joint for round ducts

BlauPlast WP 150		Wall plate for round ducts
BlauPlast RV 150		Round duct connector
BlauPlast RVK 150		Connector with backdraft damper for round ducts
BlauPlast RVPK 150		Round duct connector with a plate and a gravity backdraft damper
BlauPlast RVP 150		Round duct connector with plate
BlauPlast US-90° 150/204x60		Bend
BlauPlast US-90° 150/220x90		Bend
BlauPlast UBS 150/220x90		Connector
BlauPlast RH 150		Round duct holder

Flexible ducts

Name	Photo	Description
BlauFlex AF M1		Flexible air ducts BlauFlex
BlauFlex AF M0		Flexible air ducts BlauFlex
BlauFlex Iso N 152/7.6		Flexible air ducts BlauFlex
BlauFlex PVC		Flexible air ducts BlauFlex