

# Centro-MZ EC 160

Inline centrifugal fans

• Impeller type: Centrifugal impeller with backward curved blades
• Casing material: Galvanized steel
• Installation in any position

| | Unit of measurement | Centro-MZ EC 160 |
|---|---|---|
| Phases | - | 1 |
| Maximum supply voltage | V | 230 |
| Minimum supply voltage | V | 230 |
| Power supply frequency | Hz | 50/60 |
| Maximum airflow | $m^3/h$ | 735 |
| Weight | kg | 2.7 |
| Transported air temperature (max) | °C | 60 |
| Transported air temperature (min) | °C | -25 |
| Ingress protection rating | - | IPX4 |
| Impeller material | - | Plastic |

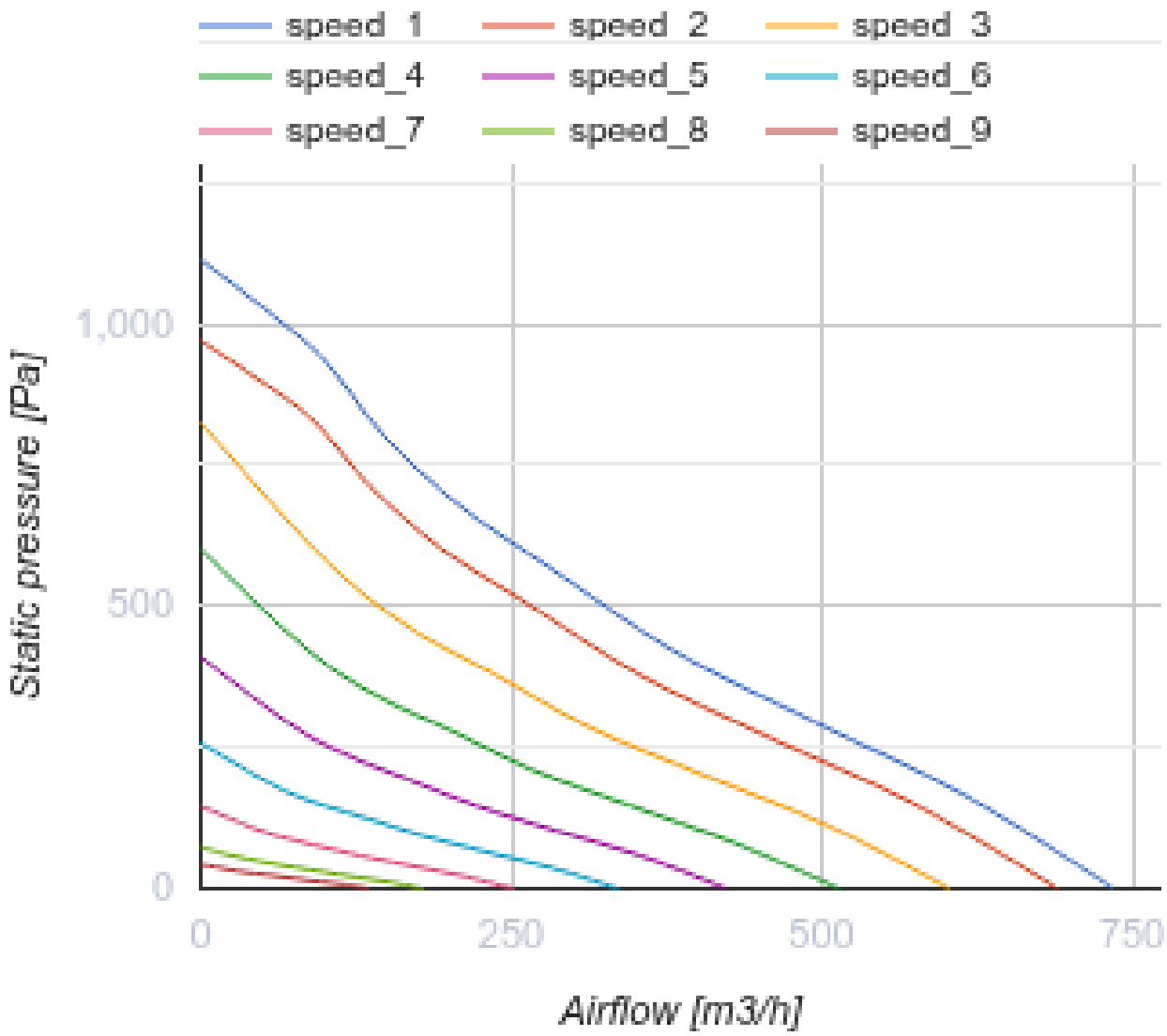
speed_1
speed_2
speed_3
speed_4
speed_5
speed_6
speed_7
speed_8
speed_9
Static pressure [Pa]
1,000
500
0
0
250
500
750
Airflow [m3/h]

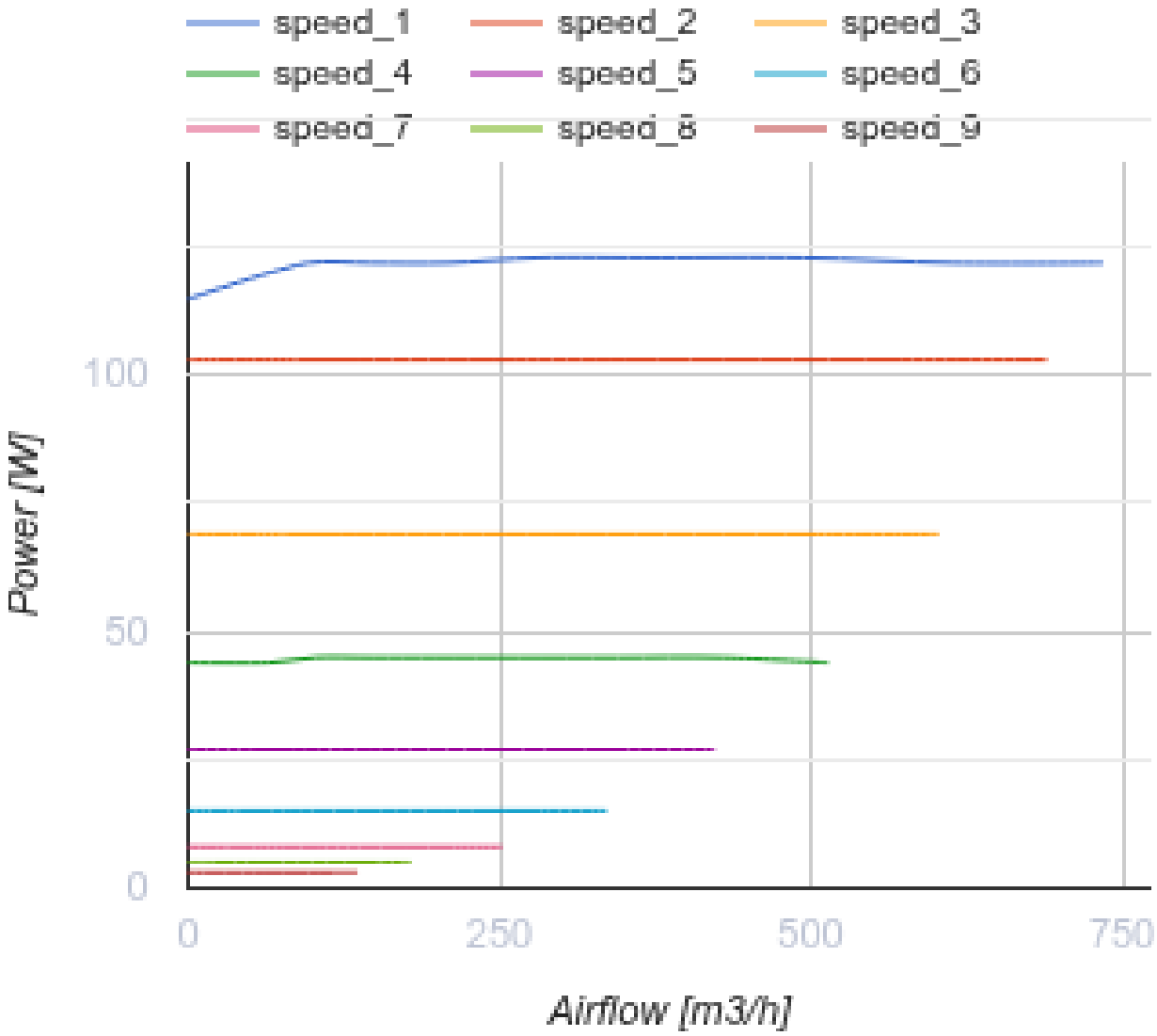


## Dimensions

| Ø D | Ø D1 | H | L | L1 | L2 |
|---|---|---|---|---|---|
| 159 | 275 | 330 | 170 | 20 | 20 |

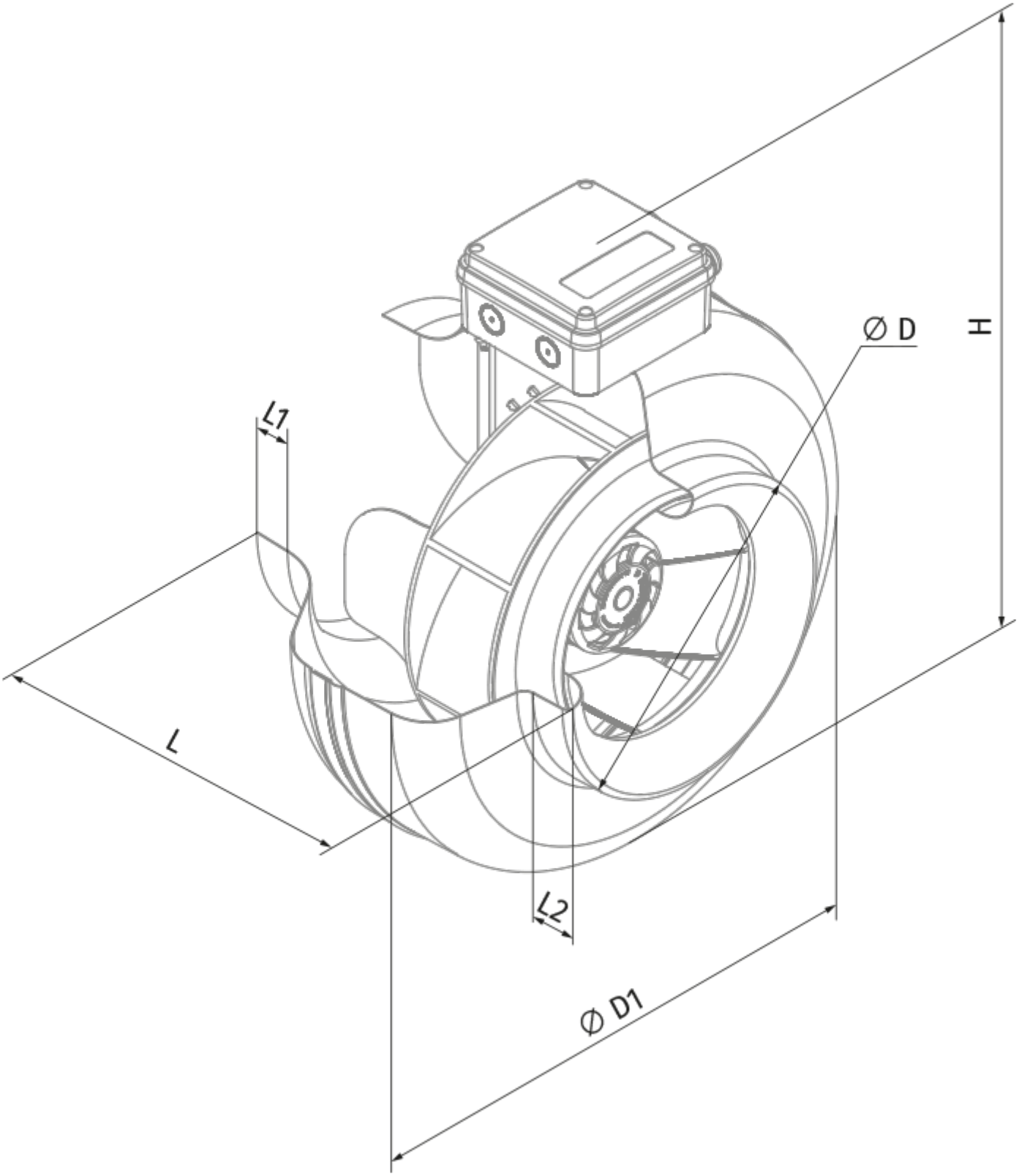
Ø D
H
L1
L
L2
Ø D1

## Ecodesign

| | |
|---|---|
| Trademark | Blauberg |
| Model | Centro-MZ EC 160 |
| Type of drive installed | External MSD or VSD |
| Type of heat recovery system | None |
| Nominal external pressure (Pa) | 423 |
| Maximum external leakage rates (%) | 2.7 |
| Static efficiency (%) | 36.6 |
| Effective electric power input (kW) | 0.124 |
| Sound power level (dB(A)) | 67 |
| Declared typology | NRVU UVU |

## Accessories

### For round ducts

| Name | Photo | Description |
|---|---|---|
| SD 160/600 |  | Silencers for round ducts |
| SD 160/900 |  | Silencers for round ducts |
| SD 160/1200 |  | Silencers for round ducts |

### For round ducts

| Name | Photo | Description |
|---|---|---|
| KFBK 160 |  | Filter boxes for round ducts |
| KFBT 160 G4 |  | Filter boxes with pocket filters for round ducts |
| KFBT 160 F5 |  | Filter boxes with pocket filters for round ducts |

| | | |
|---|---|---|
| KFBT 160 F7 |  | Filter boxes with pocket filters for round ducts |

### For round ducts

| Name | Photo | Description |
|---|---|---|
| VRV 160 |  | Backdraft dampers with spring for round ducts |
| VKA 160 |  | Air dampers for round ducts |

### Water heaters

| Name | Photo | Description |
|---|---|---|
| WKH 160-2 |  | Duct water heaters for round ducts |
| WKH 160-4 |  | Duct water heaters for round ducts |

### Electrical heaters

| Name | Photo | Description |
|---|---|---|
| EKH 160-1.2 |  | Duct electrical heaters for round ducts |
| EKH 160-1.7 |  | Duct electrical heaters for round ducts |
| EKH 160-2.0 |  | Duct electrical heaters for round ducts |
| EKH 160-2.4 |  | Duct electrical heaters for round ducts |
| EKH 160-3.4 |  | Duct electrical heaters for round ducts |
| EKH 160-3.6 |  | Duct electrical heaters for round ducts |

| | | |
|---|---|---|
| EKH 160-5.1 |  | Duct electrical heaters for round ducts |
| EKH 160-6.0 |  | Duct electrical heaters for round ducts |

### EC motors regulators

| Name | Photo | Description |
|---|---|---|
| CDT E/0-10 |  | Speed control for EC motors |

### Fittings

| Name | Photo | Description |
|---|---|---|
| K 160 |  | Clamp for round flexible ducts |