

Deco 125 T

Extract fans

- Casing material: Plastic
- Backdraft protection: Backdraft damper
- Timer: Turn off timer

	Unit of measurement	Deco 125 T
Minimum supply voltage	V	220
Maximum supply voltage	V	240
Power supply frequency	Hz	50
Maximum airflow	m³/h	185
Ambient air temperature min	°C	1
Ambient air temperature max	°C	40
Ingress protection rating	-	IP34
Impeller material	-	Plastic

Dimensions

Ø D	Ø D1	Ø D2	H	e
123.5	128.6	165	133.5	14

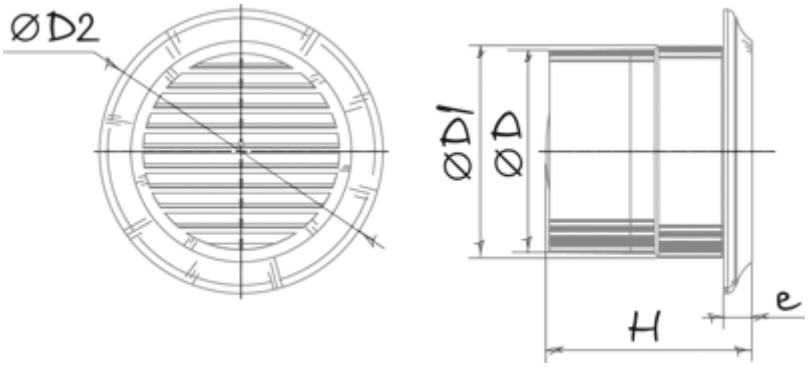
ØD2
ØD1
ØD
H
e

Ecodesign

Trademark	Blauberg					
Model	Deco 125 T					
Specific energy consumption (SEC) (kWh/(m²/a))	Cold		Average		Warm	
	-35.1	A	-17.1	E	-6.9	F
Type of ventilation unit	Unidirectional					
Type of drive installed	Multi-speed					
Type of heat recovery system	None					
Maximum flow rate (m³/h)	185					
Electric power input (W)	16					
Reference flow rate (m³/s)	0.036					
Specific power input (SPI) (W/(m³/h))	0.056					
Control typology	Clock control					
Maximum external leakage rates (%)	2.7					
Declared typology	RVU UVU					
Sound power level (dB(A))	58					
The annual electricity consumption (AEC) (kWh/a)	Cold		Average		Warm	
	64		64		64	
The annual heating saved (AHS) (kWh/a)	Cold		Average		Warm	
	3667		1874		848	

Accessories

Thyristor speed controllers

Name	Photo	Description
CDT E1.8		Thyristor speed controller