

ENH 160-1.2-1 S21

Duct heater for supply air reheating

• Casing material: Galvanized steel

	Unit of measurement	ENH 160-1.2-1 S21
Phases	-	1
Minimum supply voltage	V	230
Maximum supply voltage	V	230
Power supply frequency	Hz	50/60

Dimensions

ØD	B	H	L	L1
159	175	293	306	190

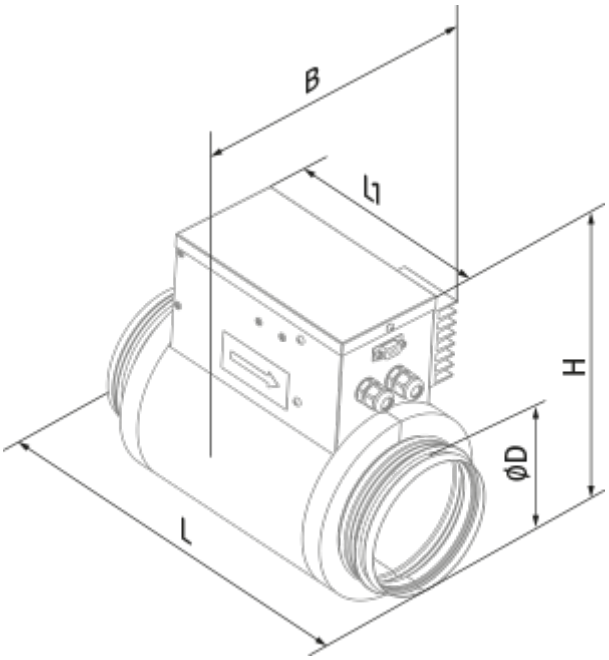
B
l1
H
ØD
L