

Flyn EC 100 white

Axial decorative exhaust fans with a decorative front panel, equipped with EC motors

- Impeller type: Axial
- Casing material: Plastic
- Short spigot
- Backdraft protection: Backdraft damper

	Unit of measurement	Flyn EC 100 white
Minimum supply voltage	V	100
Maximum supply voltage	V	240
Power supply frequency	Hz	50/60
Maximum airflow	m³/h	87
Weight	kg	0.56
Ambient air temperature min	°C	1
Ambient air temperature max	°C	40
Ingress protection rating	-	IP24
Impeller material	-	Plastic

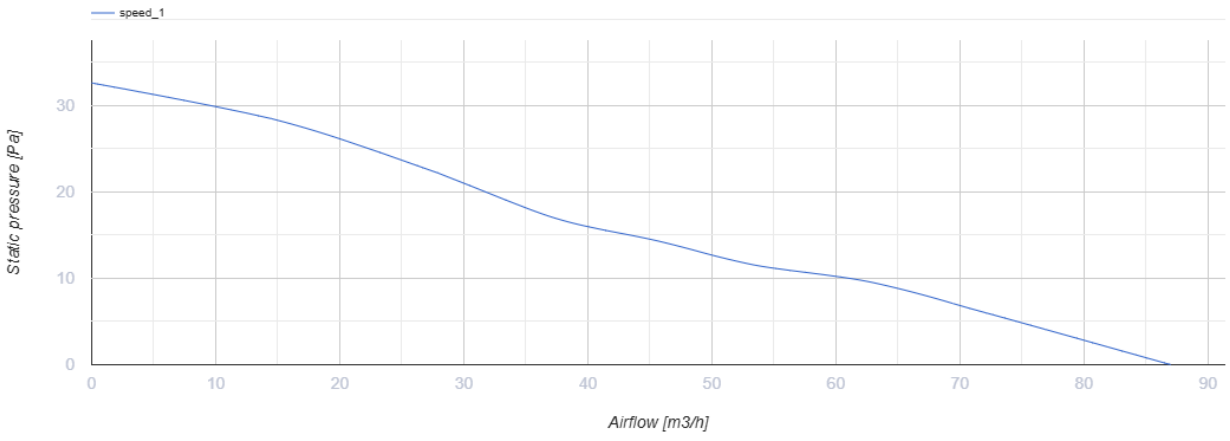

Dimensions

ØD	W	L	L1
100	180	37	32

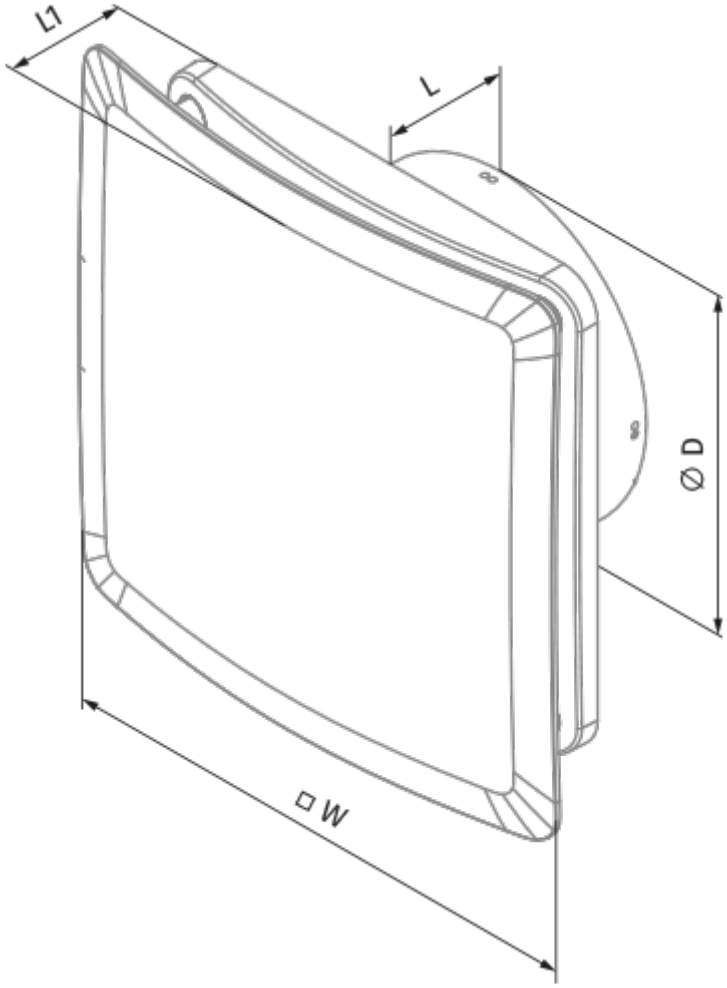

Ecodesign

Trademark	Blauberg					
Model	Flyn EC 100 white					
Specific energy consumption (SEC) (kWh/(m²/a))	Cold		Average		Warm	
	-32.6	B	-16.2	E	-6.8	F
Type of ventilation unit	Unidirectional					
Type of drive installed	Single speed					
Maximum flow rate (m³/h)	87					
Electric power input (W)	3					
Reference flow rate (m³/s)	0.017					
Specific power input (SPI) (W/(m³/h))	0.031					
Control typology	Manual control					
Maximum external leakage rates (%)	2.7					
Sound power level (dB(A))	54					
The annual electricity consumption (AEC) (kWh/a)	Cold		Average		Warm	
	39		39		39	
The annual heating saved (AHS) (kWh/a)	Cold		Average		Warm	
	3355		1715		776	