

FQM 200

Spigot with a plate for round ducts

• Casing material: Coated steel

	Unit of measurement	FQM 200

Dimensions

Ø D	a	b	L
200	250 × 250	234 × 234	50

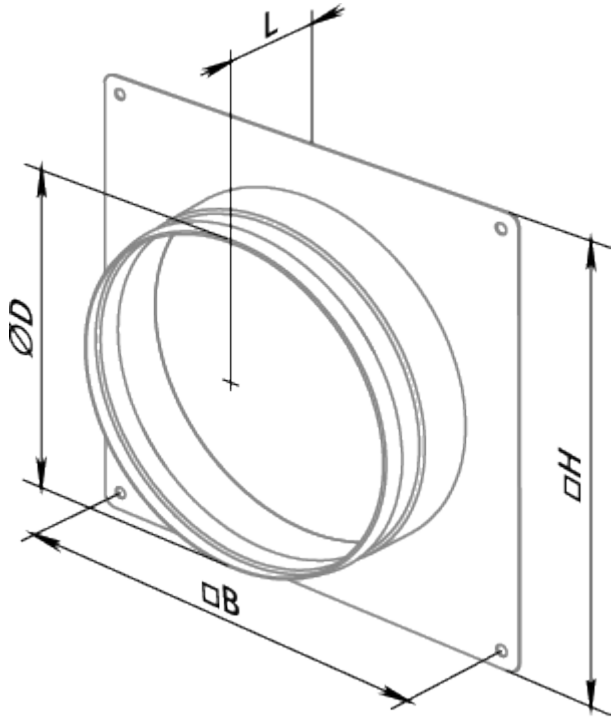
L
ØD
□H
□B