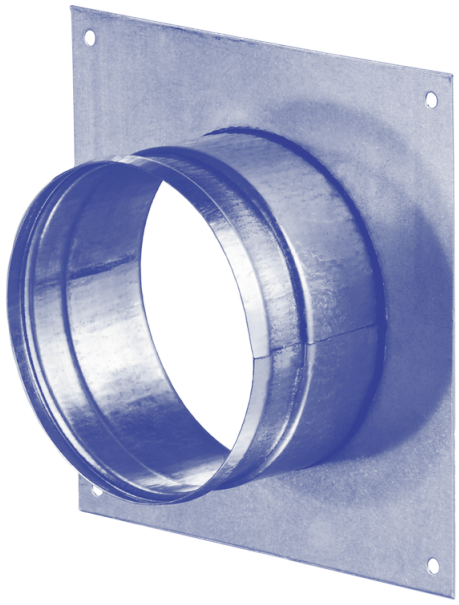

FQZ 125

Spigot with a plate for round ducts

- Casing material: Galvanized steel

	Unit of measurement	FQZ 125

Dimensions

Ø D	a	b	L
125	170 × 170	156 × 156	50

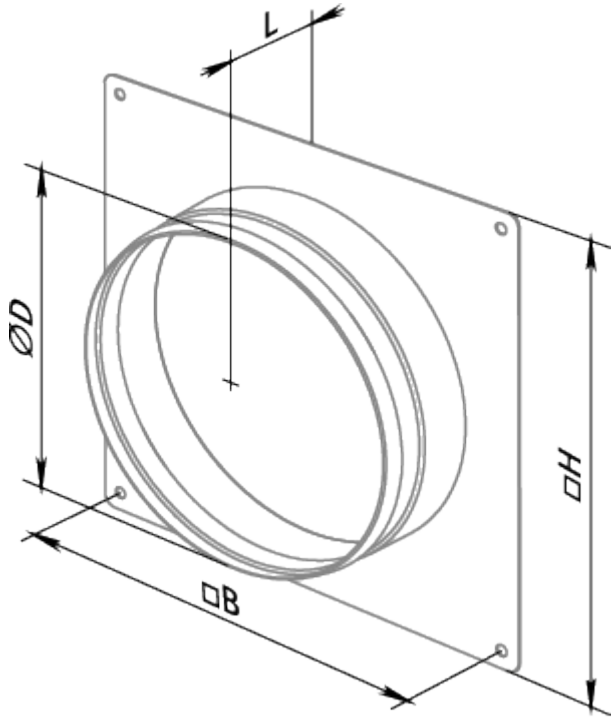
L
ØD
□H
□B