

Freshbox 110 K1

Decentralized supply and exhaust unit with heat recovery

- Sound pressure level LpA at 1 m: 40
- Heat exchanger type: Counter flow
- Heat exchanger material: Polystyrene
- Sound-insulated casing
- Bypass: Auto
- Control: Remote Control, Built-in control panel, Wired control panel
- Casing material: Galvanized steel
- Humidity sensor: Built-in
- Temperature sensor: Built-in

	Unit of measurement	Freshbox 110 K1		
Phases	-	1		
Minimum supply voltage	V	230		
Maximum supply voltage	V	230		
Power supply frequency	Hz	50/60		
Maximum airflow	m³/h	30	60	100
Sound pressure level LpA at 1 m	dB(A)	20	30	40
Heat recovery efficiency	%	93	87	84
Heat exchanger type	-	Counter flow		
Heat exchanger material	-	Polystyrene		
Weight	kg	23		
Transported air temperature (max)	°C	40		
Transported air temperature (min)	°C	-15		
Ambient air temperature min	°C	1		
Ambient air temperature max	°C	40		
Ingress protection rating	-	IP20		
Ingress protection rating of the drive	-	IP44		
Ambient air humidity max	%	60		
Minimum wall thickness	mm	100		
Maximum wall thickness	mm	2000		

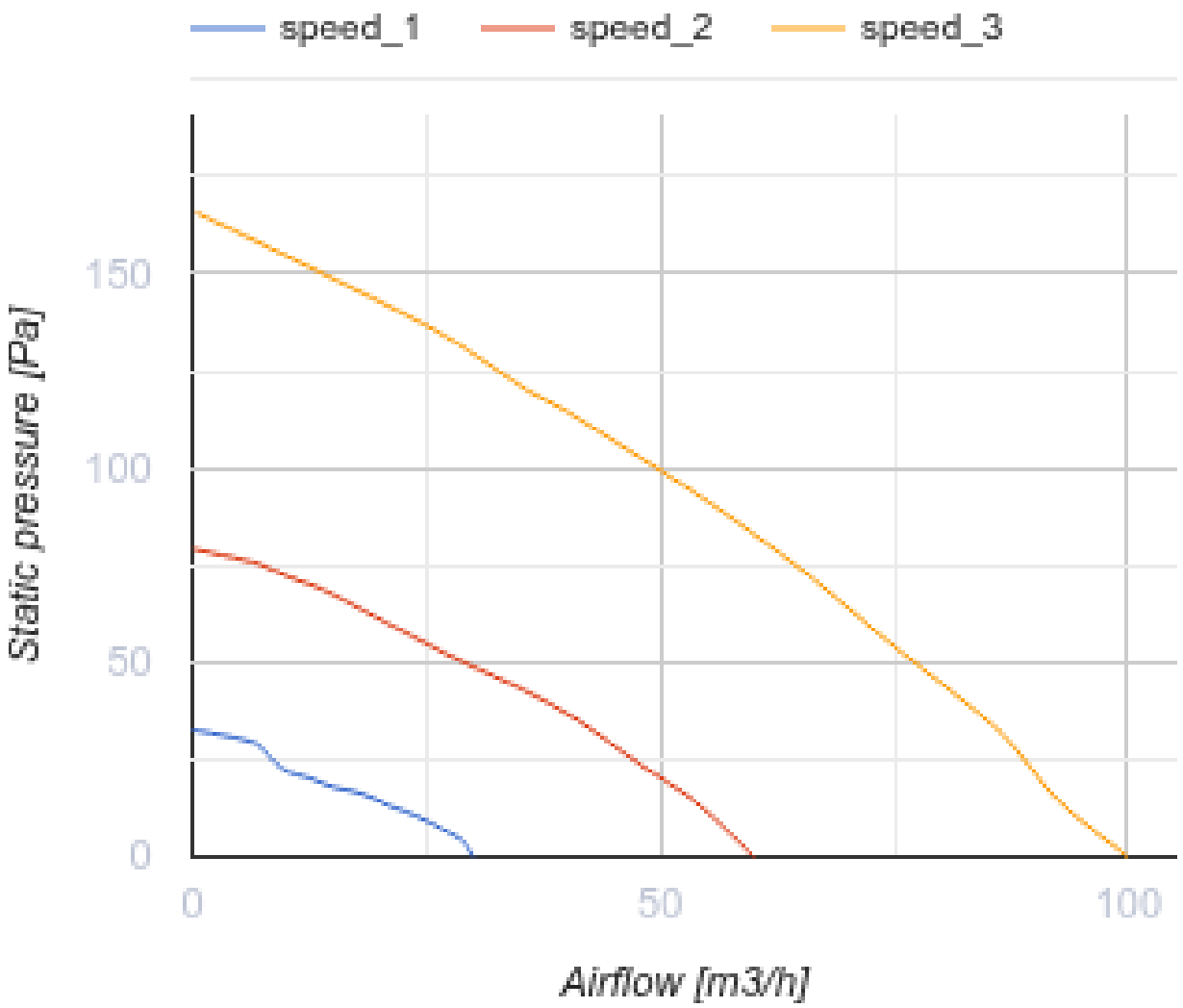
speed_1
speed_2
speed_3
Static pressure [Pa]
150
100
50
0
0
50
100
Airflow [m3/h]

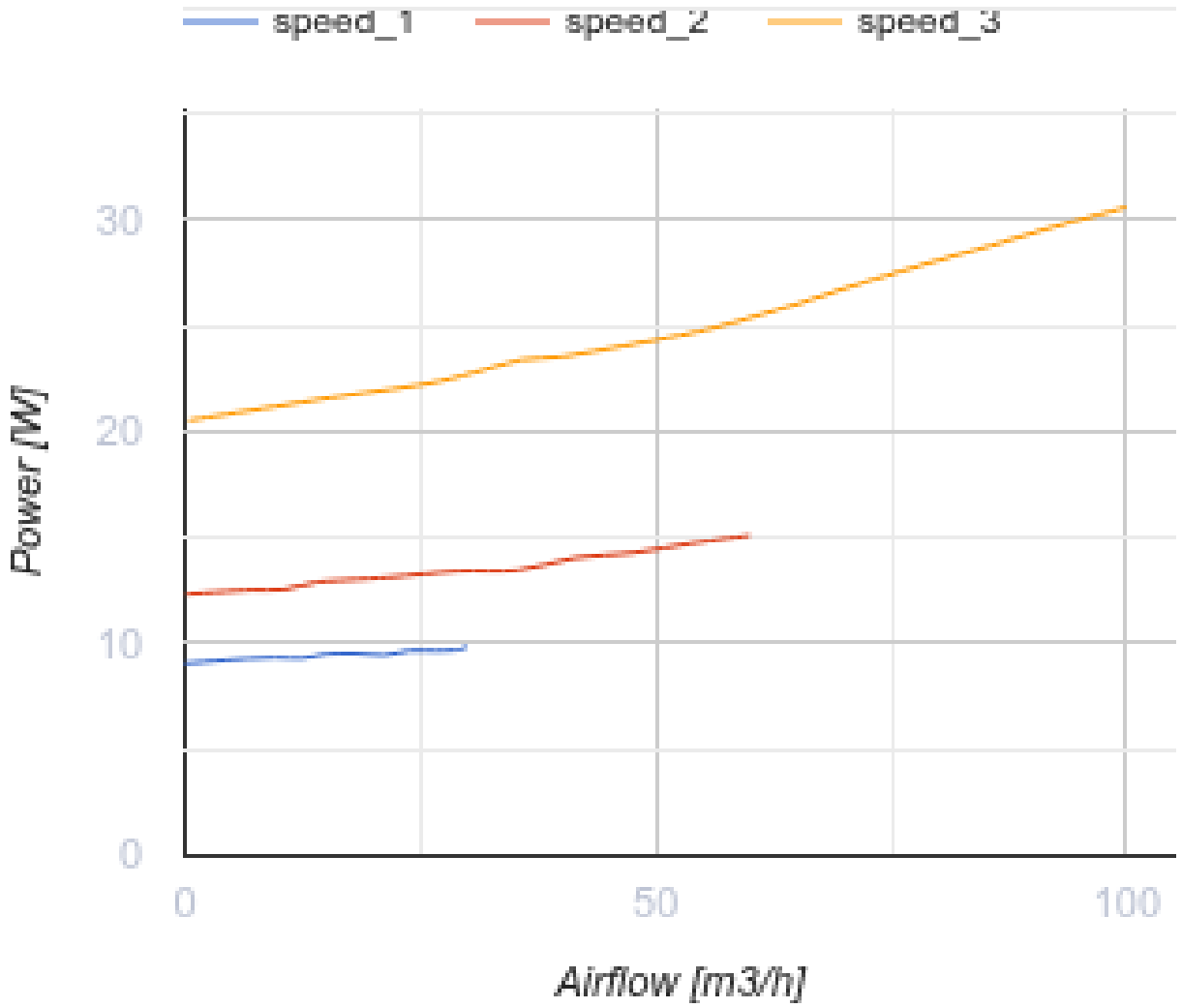

Dimensions

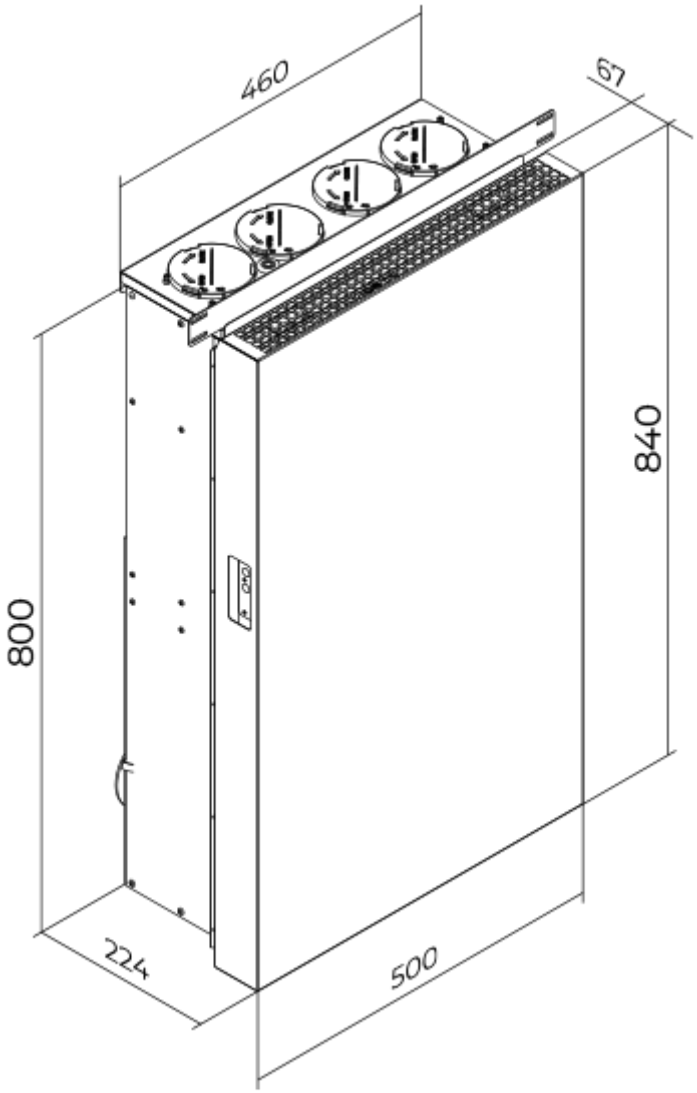
460
67
840
800
224
500

Ecodesign

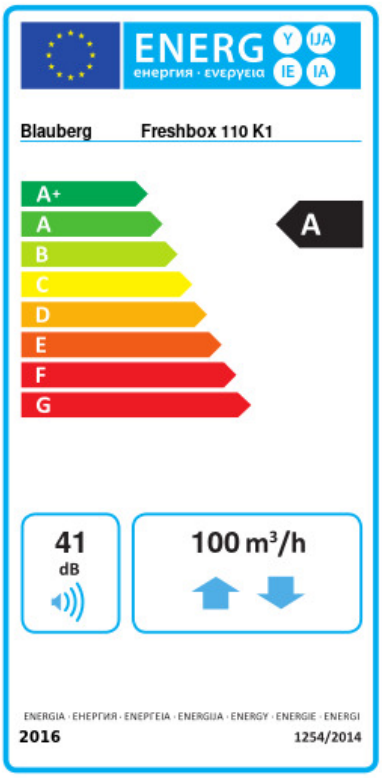

Trademark	Blauberg					
Model	Freshbox 110 K1					
Specific energy consumption (SEC) (kWh/(m²/a))	Cold		Average		Warm	
	-79.7	A+	-41	A	-16.3	E
Type of ventilation unit	Bidirectional					
Type of drive installed	3-speed					
Type of heat recovery system	Recuperative					
Thermal efficiency of heat recovery (%)	87					
Maximum flow rate (m³/h)	100					
Electric power input (W)	30.6					
Reference flow rate (m³/s)	0.017					
Specific power input (SPI) (W/(m³/h))	0.252					
Control typology	Local demand control					
Maximum internal leakage rates (%)	1.7					
Maximum external leakage rates (%)	4.7					
Airflow sensitivity at +20 Pa and -20 Pa (%)	0					
Declared typology	RVU BVU					
Sound power level (dB(A))	41					
The annual electricity consumption (AEC) (kWh/a)	Cold		Average		Warm	
	764		227		182	
The annual heating saved (AHS) (kWh/a)	Cold		Average		Warm	
	9007		4604		2082	

Accessories

CO2 sensors

Name	Photo	Description
CD-1		CO2 sensors
CD-2		CO2 sensors

Other accessories

Name	Photo	Description
EH Freshbox 100		Electric heater