

Freshbox E1-100 ERV WiFi

Single-room air handling units

- Power of electrical reheater: 350
- Heat exchanger type: Counter flow
- Heat exchanger material: Enthalpy
- Sound-insulated casing
- Enthalpy heat exchanger
- Reheater: Electric
- Control: Built-in control panel, Smartphone
- Casing material: Coated steel
- Temperature sensor: Built-in

	Unit of measurement	Freshbox E1-100 ERV WiFi				
Phases	-	1				
Minimum supply voltage	V	230				
Maximum supply voltage	V	230				
Power supply frequency	Hz	50/60				
Power of electrical reheater	W	350				
Maximum airflow	m³/h	30	44	60	75	100
Heat recovery efficiency	%	96	94	89	85	83
Heat exchanger type	-	Counter flow				
Heat exchanger material	-	Enthalpy				
Weight	kg	31				
Transported air temperature (max)	°C	40				
Transported air temperature (min)	°C	-20				
Ambient air temperature min	°C	1				
Ambient air temperature max	°C	40				
Ingress protection rating	-	IP22				
Ingress protection rating of the drive	-	IP44				
Ambient air humidity max	%	70				
Minimum wall thickness	mm	50				
Maximum wall thickness	mm	2000				

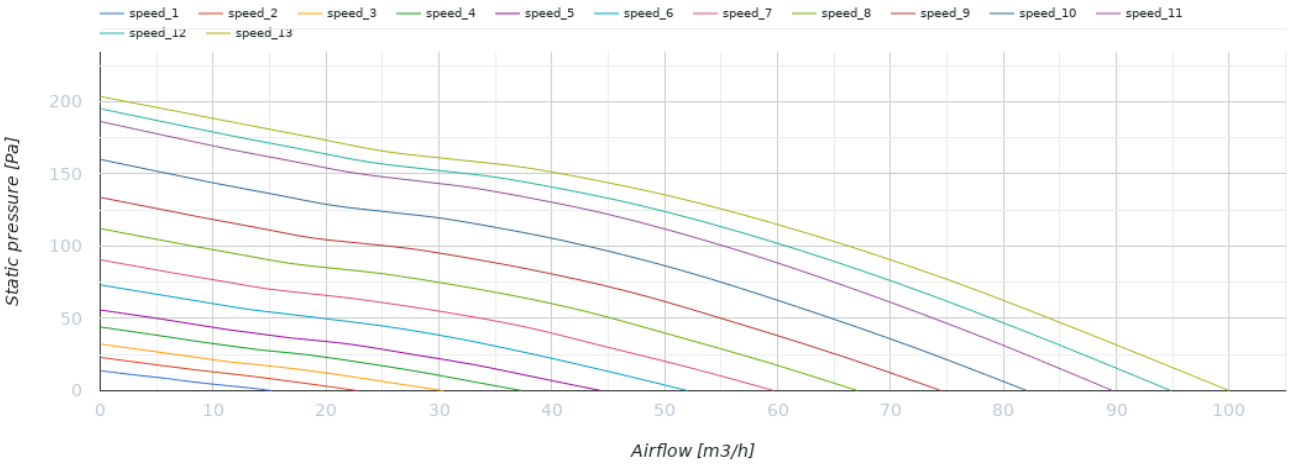

Dimensions

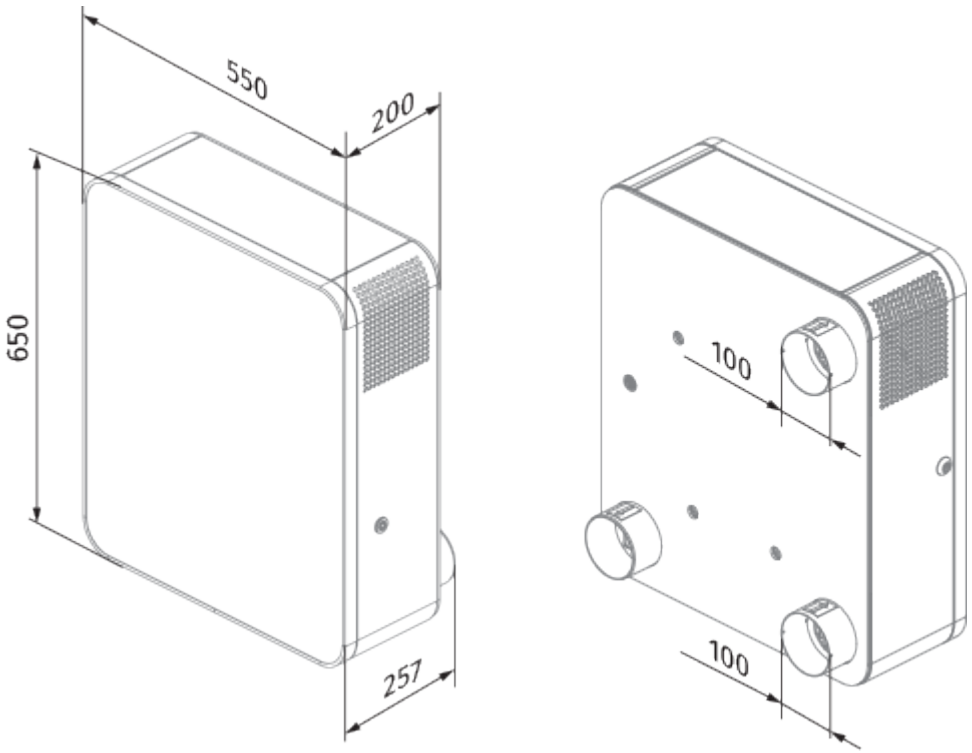

Accessories

CO2 sensors

Name	Photo	Description
CD-1		CO2 sensors

CD-2		CO2 sensors

Other accessories

Name	Photo	Description
EH Freshbox 100		Electric heater
FP 193x158x18 G4 PPI		G4 panel filter

Humidity sensors

Name	Photo	Description
HR-S		Electro-mechanical humidistat