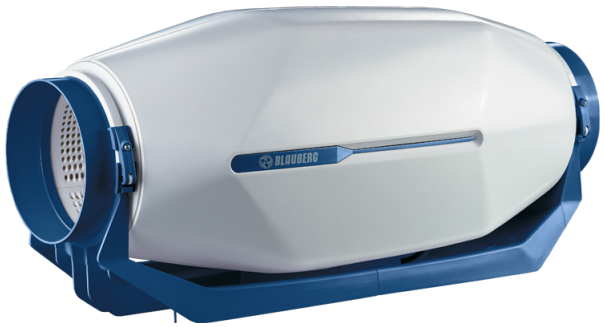

inWave EC 150/160 G1

Mixed-flow inline fans in sound-insulated casings with EC-motors

- Sound-insulated casing
- Control: Speed controller
- Impeller type: Mixed-flow
- Casing material: Polypropylene
- Temperature sensor: Remote

	Unit of measurement	inWave EC 150/160 G1
Phases	-	1
Minimum supply voltage	V	230
Maximum supply voltage	V	230
Power supply frequency	Hz	50/60
Maximum airflow	m³/h	600
Weight	kg	5
Transported air temperature (max)	°C	55
Transported air temperature (min)	°C	-25
Ambient air temperature min	°C	1
Ambient air temperature max	°C	40
Ingress protection rating	-	IPX4
Ingress protection rating of the drive	-	IP44
Impeller material	-	Plastic

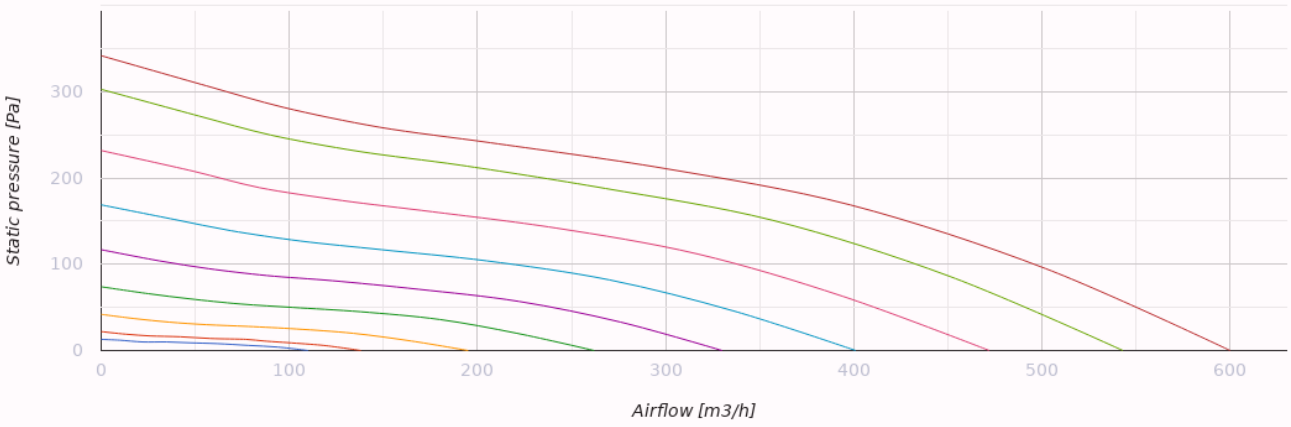

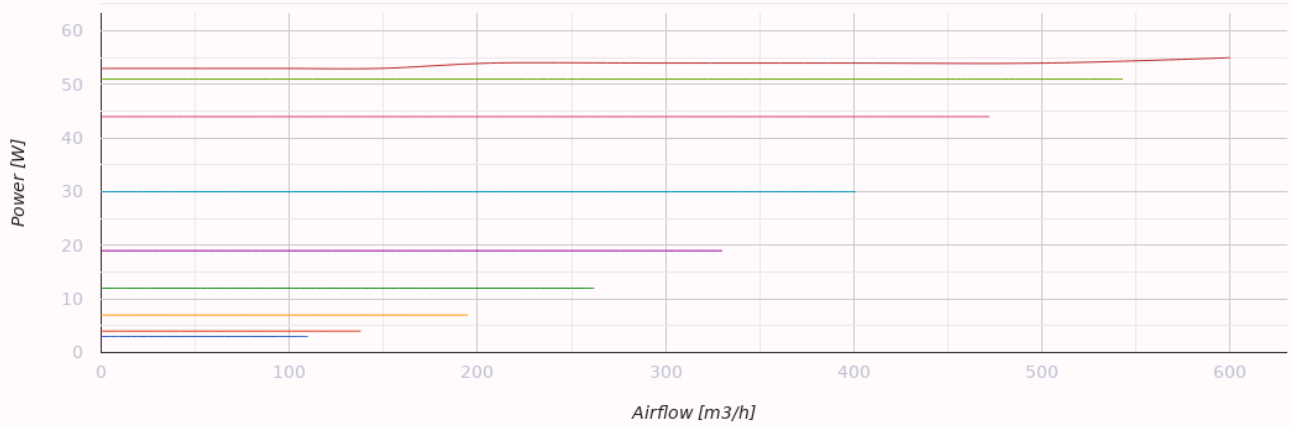

Dimensions

Ø D	W	L	H
149 (159)	253	606	273

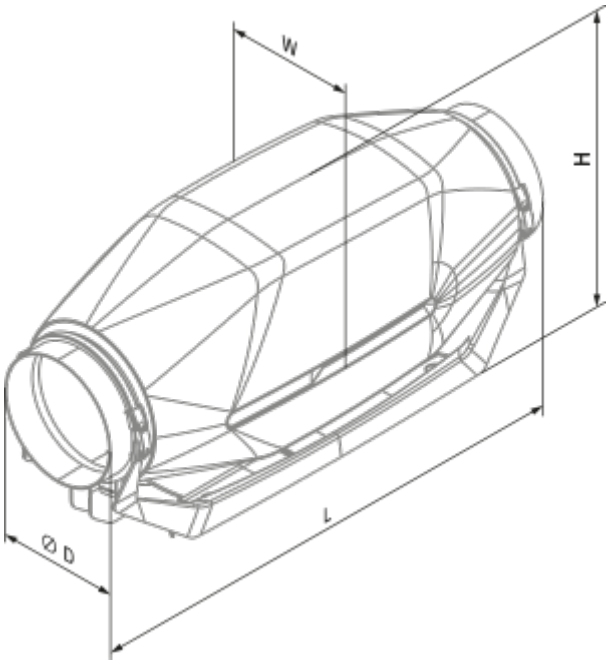
W
H
L
Ø D

Ecodesign

Trademark	Blauberg					
Model	inWave EC 150/160 G1					
Specific energy consumption (SEC) (kWh/(m²/a))	Cold		Average		Warm	
	-54.3	A+	-27.3	B	-11.8	E
Type of ventilation unit	Unidirectional					
Type of drive installed	Variable speed					
Type of heat recovery system	None					
Maximum flow rate (m³/h)	320					
Electric power input (W)	39					
Reference flow rate (m³/s)	0.054					
Reference pressure difference (Pa)	50					
Specific power input (SPI) (W/(m³/h))	0.077					
Control typology	Local demand control					
Maximum external leakage rates (%)	2.7					
Sound power level (dB(A))	54					
The annual electricity consumption (AEC) (kWh/a)	Cold		Average		Warm	
	41		41		41	
The annual heating saved (AHS) (kWh/a)	Cold		Average		Warm	
	5536		2830		1280	

Accessories

For round ducts

Name	Photo	Description
SD 150/600		Silencers for round ducts
SD 150/900		Silencers for round ducts
SD 150/1200		Silencers for round ducts

SD 160/600		Silencers for round ducts
SD 160/900		Silencers for round ducts
SD 160/1200		Silencers for round ducts

For round ducts

Name	Photo	Description
KFBK 150		Filter boxes for round ducts
KFBK 160		Filter boxes for round ducts
KFBT 150 G4		Filter boxes with pocket filters for round ducts
KFBT 150 F5		Filter boxes with pocket filters for round ducts
KFBT 150 F7		Filter boxes with pocket filters for round ducts
KFBT 160 G4		Filter boxes with pocket filters for round ducts
KFBT 160 F5		Filter boxes with pocket filters for round ducts
KFBT 160 F7		Filter boxes with pocket filters for round ducts

For round ducts

Name	Photo	Description
VRV 150		Backdraft dampers with spring for round ducts

VRV 160		Backdraft dampers with spring for round ducts
VKA 150		Air dampers for round ducts
VKA 160		Air dampers for round ducts

Water heaters

Name	Photo	Description
WKH 150-2		Duct water heaters for round ducts
WKH 150-4		Duct water heaters for round ducts
WKH 160-2		Duct water heaters for round ducts
WKH 160-4		Duct water heaters for round ducts

Electrical heaters

Name	Photo	Description
EKH 150-1.2		Duct electrical heaters for round ducts
EKH 150-1.7		Duct electrical heaters for round ducts
EKH 150-2.0		Duct electrical heaters for round ducts
EKH 150-2.4		Duct electrical heaters for round ducts
EKH 150-3.4		Duct electrical heaters for round ducts

EKH 150-3.6		Duct electrical heaters for round ducts
EKH 150-5.1		Duct electrical heaters for round ducts
EKH 150-6.0		Duct electrical heaters for round ducts
EKH 160-1.2		Duct electrical heaters for round ducts
EKH 160-1.7		Duct electrical heaters for round ducts
EKH 160-2.0		Duct electrical heaters for round ducts
EKH 160-2.4		Duct electrical heaters for round ducts
EKH 160-3.4		Duct electrical heaters for round ducts
EKH 160-3.6		Duct electrical heaters for round ducts
EKH 160-5.1		Duct electrical heaters for round ducts
EKH 160-6.0		Duct electrical heaters for round ducts

EC motors regulators

Name	Photo	Description
CDT E/0-10		Speed control for EC motors