

Iso-Primo 200 W

Mixed-flow inline fans in sound-insulated casings

- Sound-insulated casing
- Impeller type: Mixed-flow
- Casing material: Galvanized steel
- Installation in any position
- Cable with mains plug

	Unit of measurement	Iso-Primo 200 W		
Speed	-	1	2	3
Phases	-	1		
Minimum supply voltage	V	230		
Maximum supply voltage	V	230		
Power supply frequency	Hz	50		
Maximum airflow	m³/h	692	906	1110
Weight	kg	8.2		
Transported air temperature (max)	°C	55		
Transported air temperature (min)	°C	-25		
Ambient air temperature min	°C	1		
Ambient air temperature max	°C	40		
Ingress protection rating	-	IPX4		
Ingress protection rating of the drive	-	IP20		
Impeller material	-	Plastic		

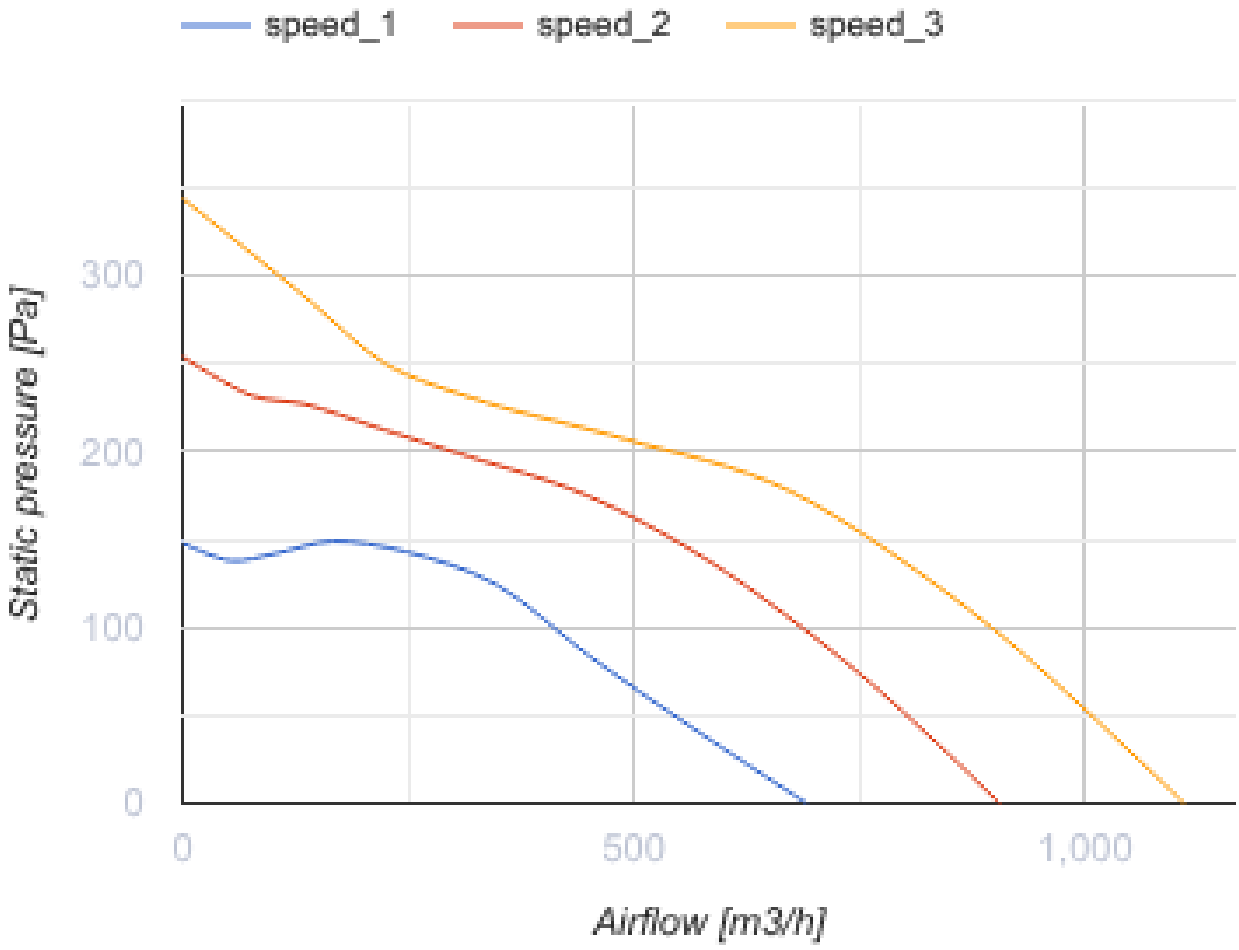
speed_1
speed_2
speed_3
Static pressure [Pa]
300
200
100
0
0
500
1,000
Airflow [m3/h]

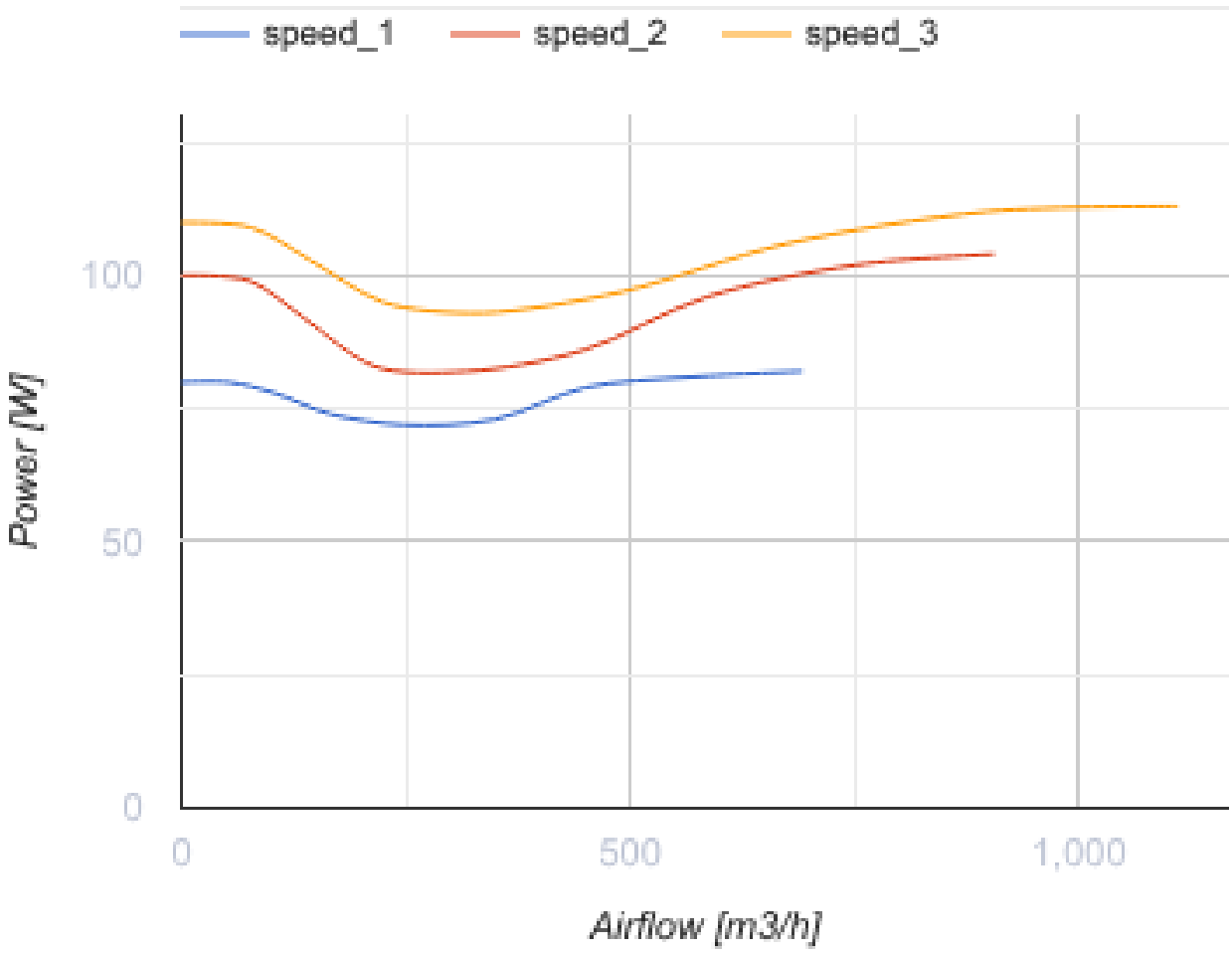

Dimensions

ØD	ØD1	H	L	L1
199	281	339	601	739

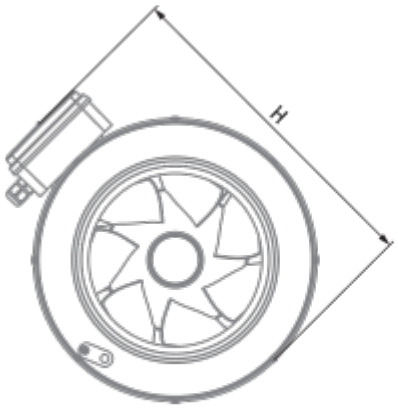
H

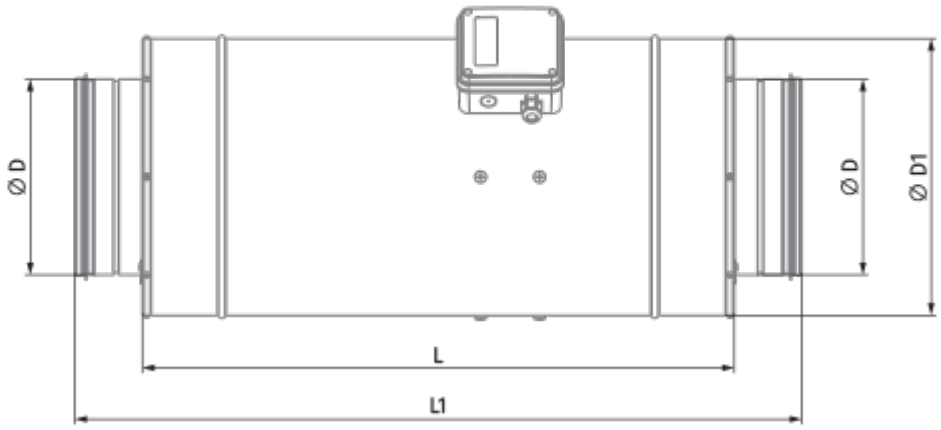
Ø D
Ø D
Ø D1
L
L1

Ecodesign

Trademark	Blauberg
Model	Iso-Primo 200 W
Type of drive installed	Integrated VSD
Type of heat recovery system	None
Nominal external pressure (Pa)	177
Maximum external leakage rates (%)	2.7
Static efficiency (%)	31.9
Declared typology	NRVU UVU
Effective electric power input (kW)	0.106
Sound power level (dB(A))	62