

Iso-Primo 355 W

Mixed-flow inline fans in sound-insulated casings

- Sound-insulated casing
- Impeller type: Mixed-flow
- Casing material: Galvanized steel
- Installation in any position
- Cable with mains plug

	Unit of measurement	Iso-Primo 355 W		
Speed	-	1	2	3
Phases	-	1		
Minimum supply voltage	V	230		
Maximum supply voltage	V	230		
Power supply frequency	Hz	50		
Maximum airflow	m³/h	1986	2170	2360
Weight	kg	20.7		
Transported air temperature (max)	°C	55		
Transported air temperature (min)	°C	-25		
Ambient air temperature max	°C	40		
Ambient air temperature min	°C	1		
Ingress protection rating	-	IPX4		
Ingress protection rating of the drive	-	IP20		
Impeller material	-	Plastic		

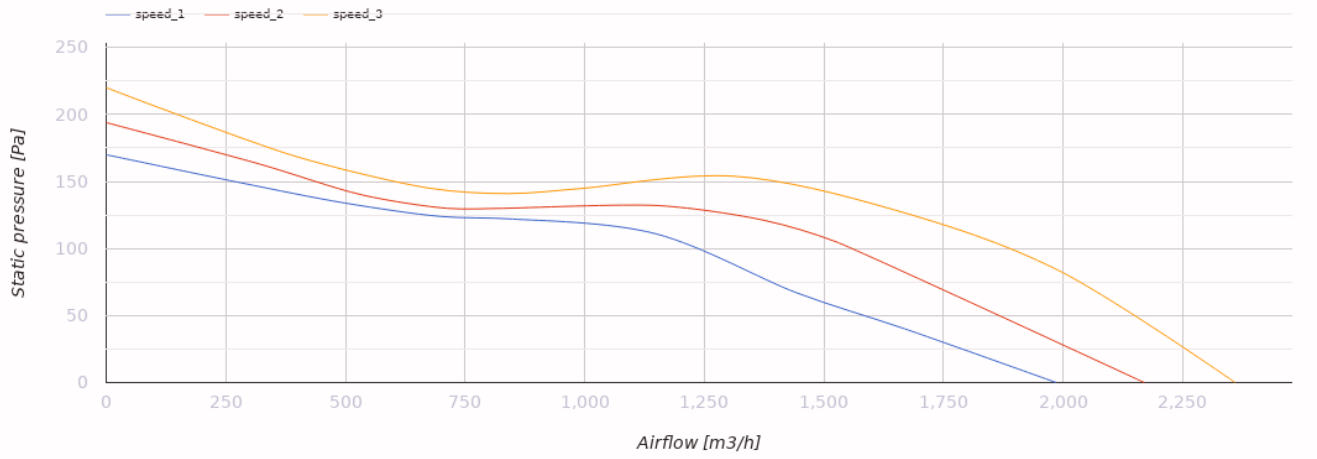

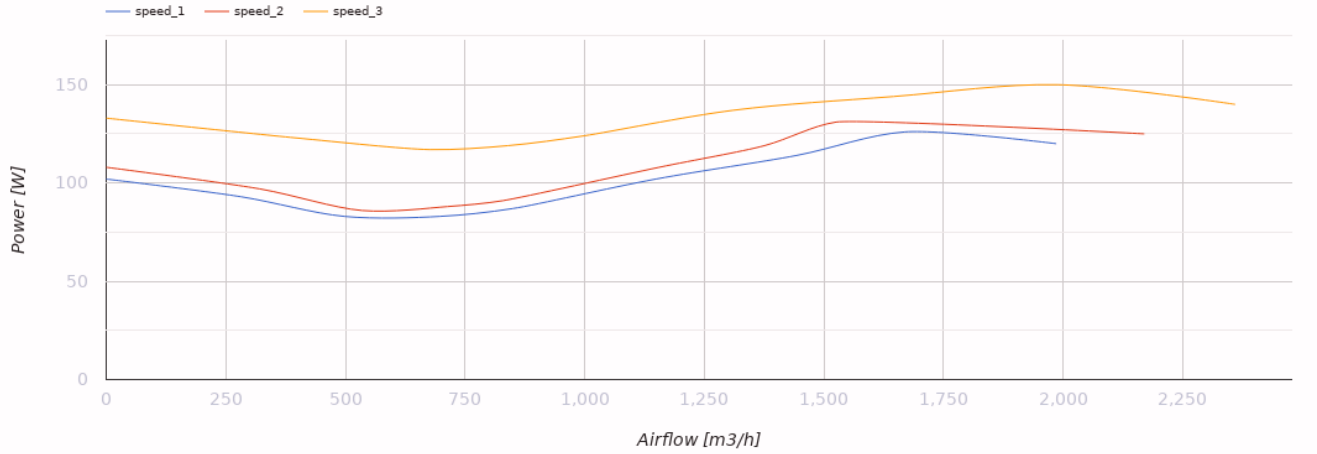

Dimensions

Ø D	Ø D1	H	L	L1
354	412	471	601	739

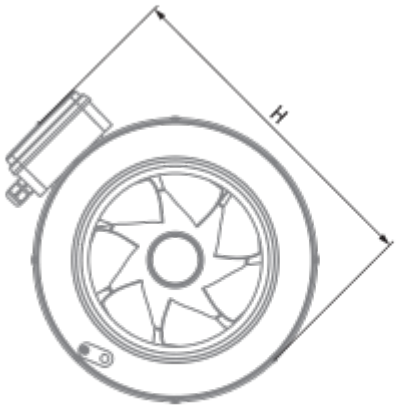

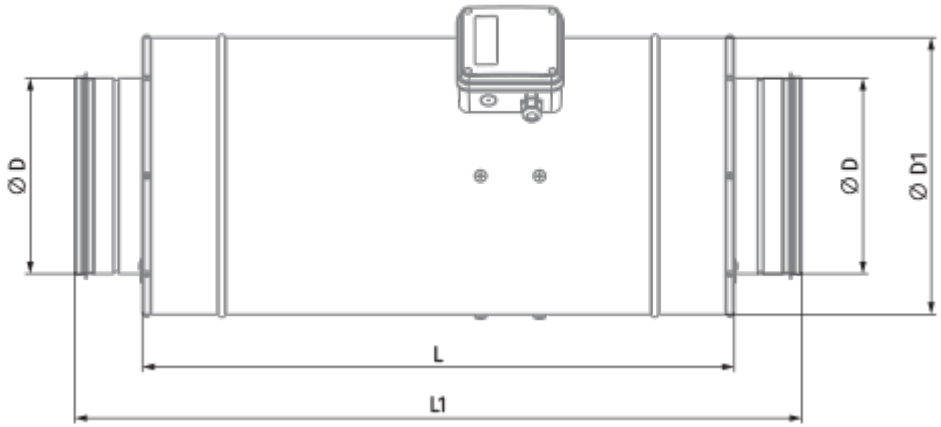

Accessories

For round ducts

Name	Photo	Description
SD 355/600		Silencers for round ducts
SD 355/900		Silencers for round ducts
SD 355/1200		Silencers for round ducts

For round ducts

Name	Photo	Description
VKA 355		Air dampers for round ducts

Thyristor speed controllers

Name	Photo	Description
CDT E1.8		Thyristor speed controller
CDT1 E1.5		Multi-speed switches
CDTE E3.0 TP		Speed controllers

Speed control switches

Name	Photo	Description
CDP-3/5		Multi-speed switch