

Iso-Primo EC 315 G1

Mixed-flow inline fans in sound-insulated casings with EC-motors

- Sound-insulated casing
- Control: Speed controller
- Impeller type: Mixed-flow
- Casing material: Galvanized steel
- Installation in any position
- Cable with mains plug
- Temperature sensor: Remote

	Unit of measurement	Iso-Primo EC 315 G1
Phases	-	1
Minimum supply voltage	V	230
Maximum supply voltage	V	230
Power supply frequency	Hz	50/60
Maximum airflow	m³/h	3090
Weight	kg	20.7
Transported air temperature (max)	°C	55
Transported air temperature (min)	°C	-25
Ambient air temperature min	°C	1
Ambient air temperature max	°C	40
Ingress protection rating	-	IPX4
Ingress protection rating of the drive	-	IP44
Impeller material	-	Plastic

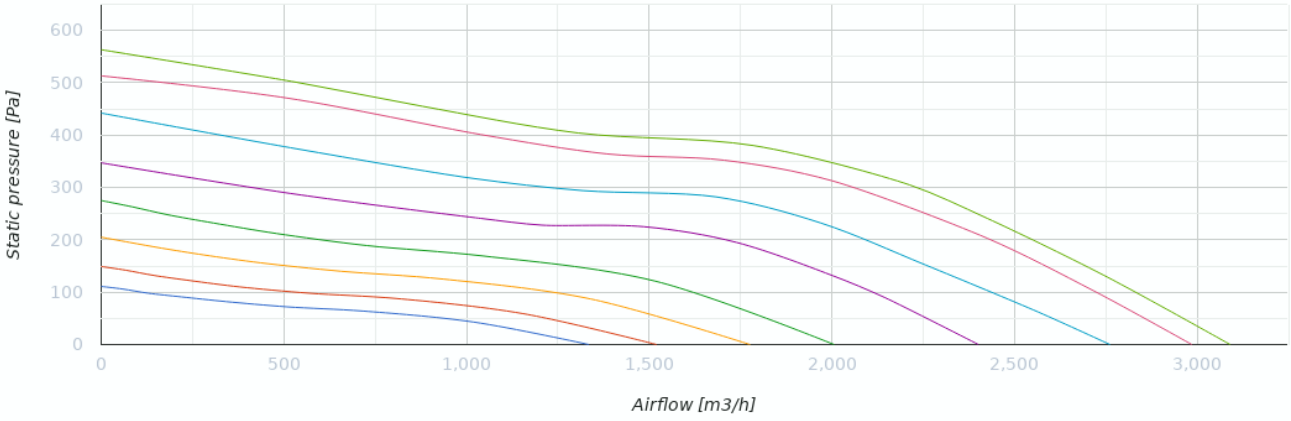

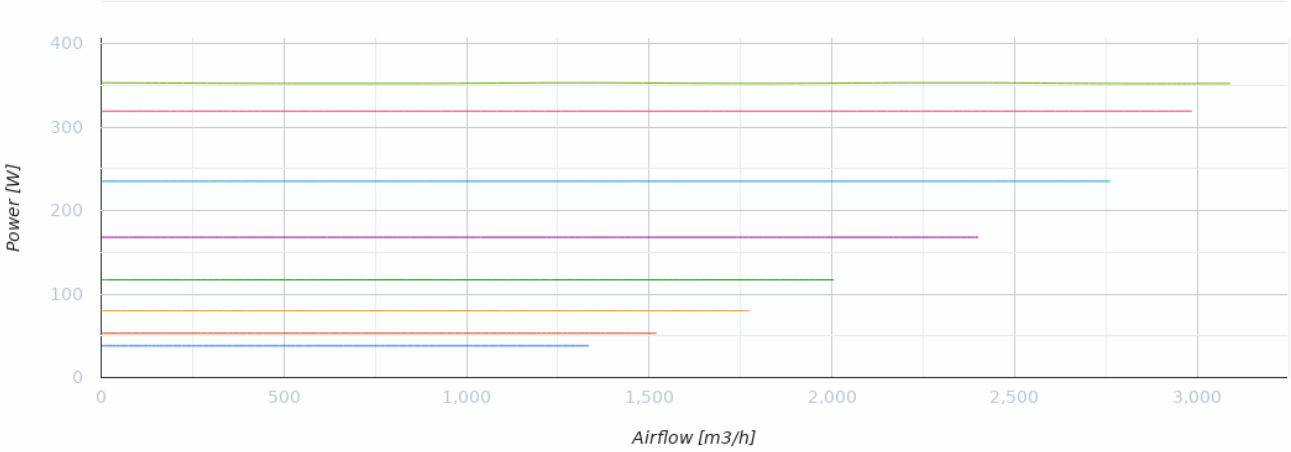

Dimensions

Ø D	Ø D1	H	L	L1
314	412	468	601	739

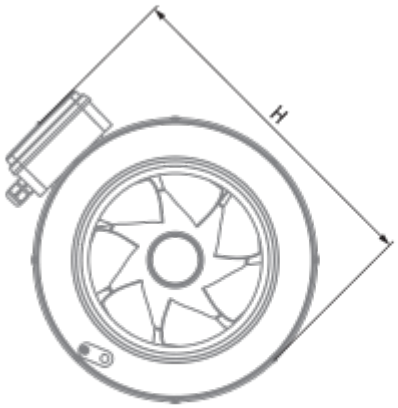

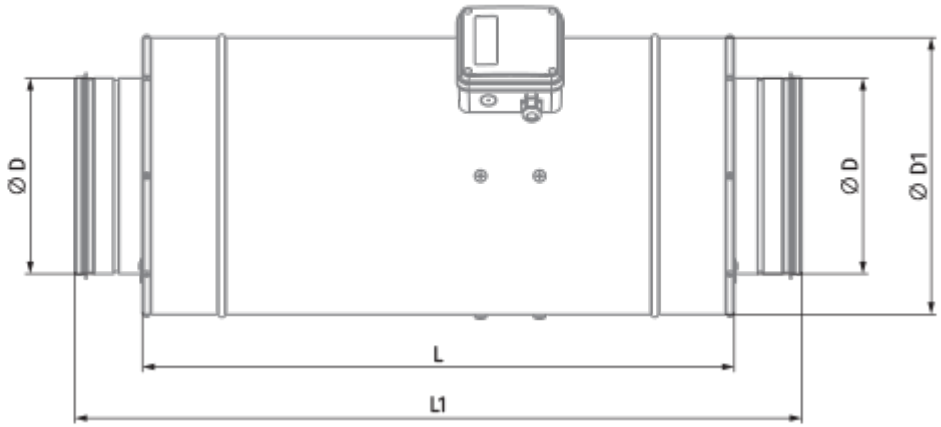

Accessories

For round ducts

Name	Photo	Description
SD 315/600		Silencers for round ducts
SD 315/900		Silencers for round ducts
SD 315/1200		Silencers for round ducts

For round ducts

Name	Photo	Description
KFBK 315		Filter boxes for round ducts
KFBT 315 G4		Filter boxes with pocket filters for round ducts
KFBT 315 F5		Filter boxes with pocket filters for round ducts
KFBT 315 F7		Filter boxes with pocket filters for round ducts

For round ducts

Name	Photo	Description
VRV 315		Backdraft dampers with spring for round ducts
VKA 315		Air dampers for round ducts

Water heaters

Name	Photo	Description

WKH 315-2		Duct water heaters for round ducts
WKH 315-4		Duct water heaters for round ducts

Electrical heaters

Name	Photo	Description
EKH 315-1.2		Duct electrical heaters for round ducts
EKH 315-2.0		Duct electrical heaters for round ducts
EKH 315-2.4		Duct electrical heaters for round ducts
EKH 315-3.6		Duct electrical heaters for round ducts
EKH 315-6.0		Duct electrical heaters for round ducts
EKH 315-9.0		Duct electrical heaters for round ducts

EC motors regulators

Name	Photo	Description
CDT E/0-10		Speed control for EC motors