

Iso-Primo EC 400

Mixed-flow inline fans in sound-insulated casings with EC-motors

- Sound-insulated casing
- Impeller type: Mixed-flow
- Casing material: Galvanized steel
- Installation in any position

	Unit of measurement	Iso-Primo EC 400
Phases	-	1
Minimum supply voltage	V	230
Maximum supply voltage	V	230
Power supply frequency	Hz	50/60
Maximum airflow	m³/h	5415
Weight	kg	22.8
Transported air temperature (max)	°C	55
Transported air temperature (min)	°C	-25
Ambient air temperature min	°C	1
Ambient air temperature max	°C	40
Ingress protection rating	-	IPX4
Ingress protection rating of the drive	-	IP44
Impeller material	-	Plastic

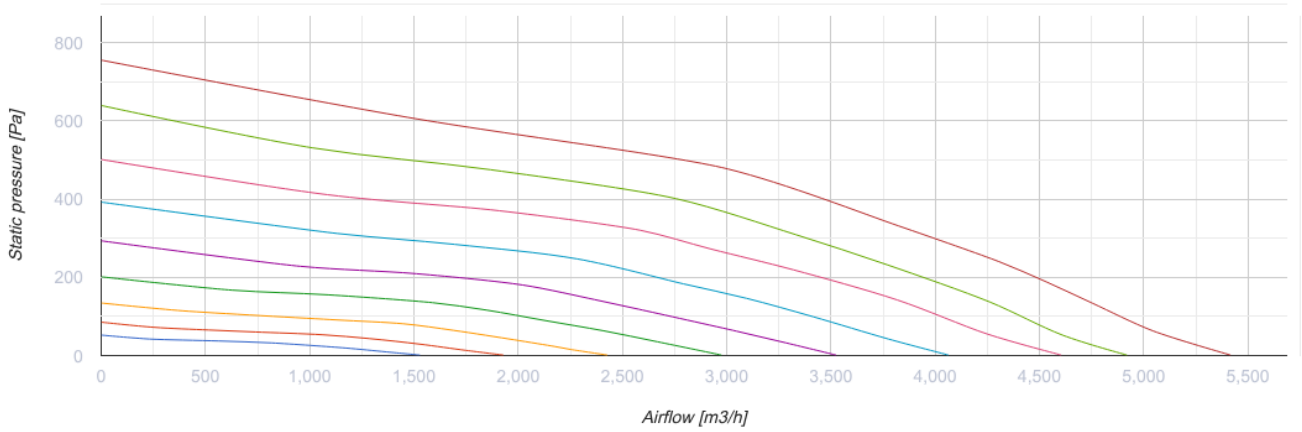

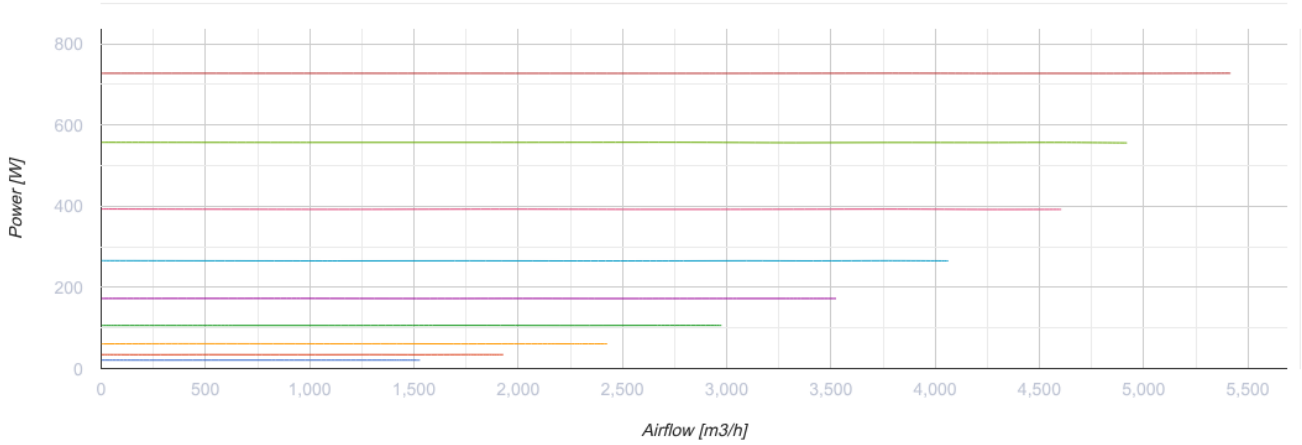

Dimensions

Ø D	Ø D1	H	L	L1
399	460	517	648	785

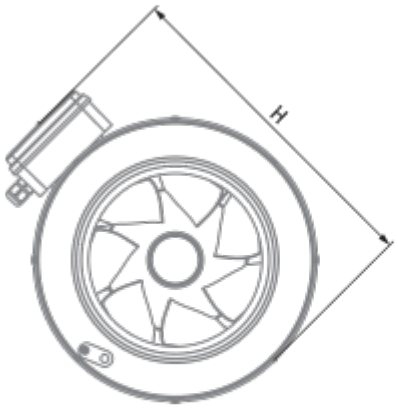

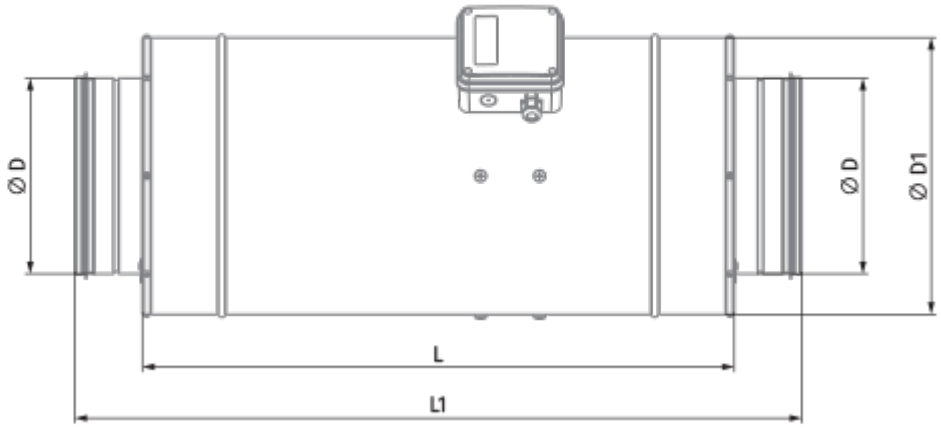

Ecodesign

Trademark	Blauberg
Model	Iso-Primo EC 400
Type of ventilation unit	Unidirectional
Type of drive installed	Integrated VSD
Type of heat recovery system	None
Nominal external pressure (Pa)	298
Maximum external leakage rates (%)	2.7
Static efficiency (%)	45.9
Declared typology	NRVU UVU
Effective electric power input (kW)	0.73
Sound power level (dB(A))	68

Accessories

For round ducts

Name	Photo	Description
SD 400/900		Silencers for round ducts
SD 400/1200		Silencers for round ducts

For round ducts

Name	Photo	Description
VKA 400		Air dampers for round ducts

EC motors regulators

Name	Photo	Description
CDT E/0-10		Speed control for EC motors