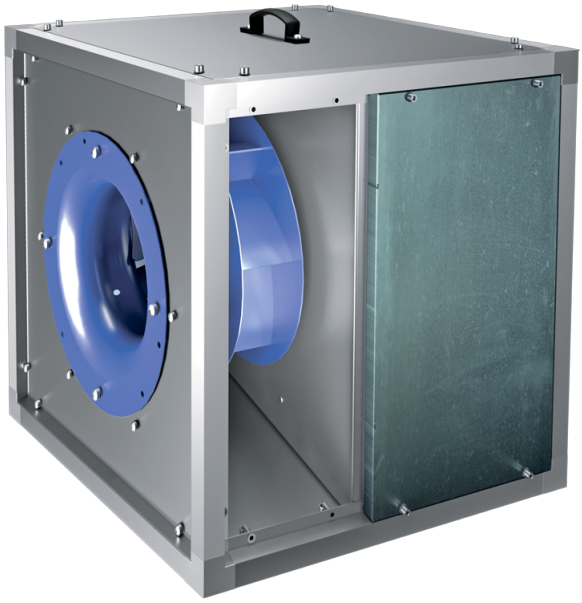

Iso-VK 500 4D (400/60)

Kitchen inline fans in sound-insulated casings with operational temperature of 120 °C

• Sound-insulated casing
• Impeller type: Centrifugal impeller with backward curved blades
• Casing material: Aluzinc
• Installation in any position

	Unit of measurement	Iso-VK 500 4D (400/60)
Phases	-	3
Minimum supply voltage	V	400
Maximum supply voltage	V	400
Power supply frequency	Hz	60
Weight	kg	101.8
Transported air temperature (max)	°C	120
Transported air temperature (min)	°C	-25
Maximum transported air temperature	-	120°C CONTINUOUS
Ingress protection rating	-	IPX4
Impeller material	-	Steel
Size	mm	500

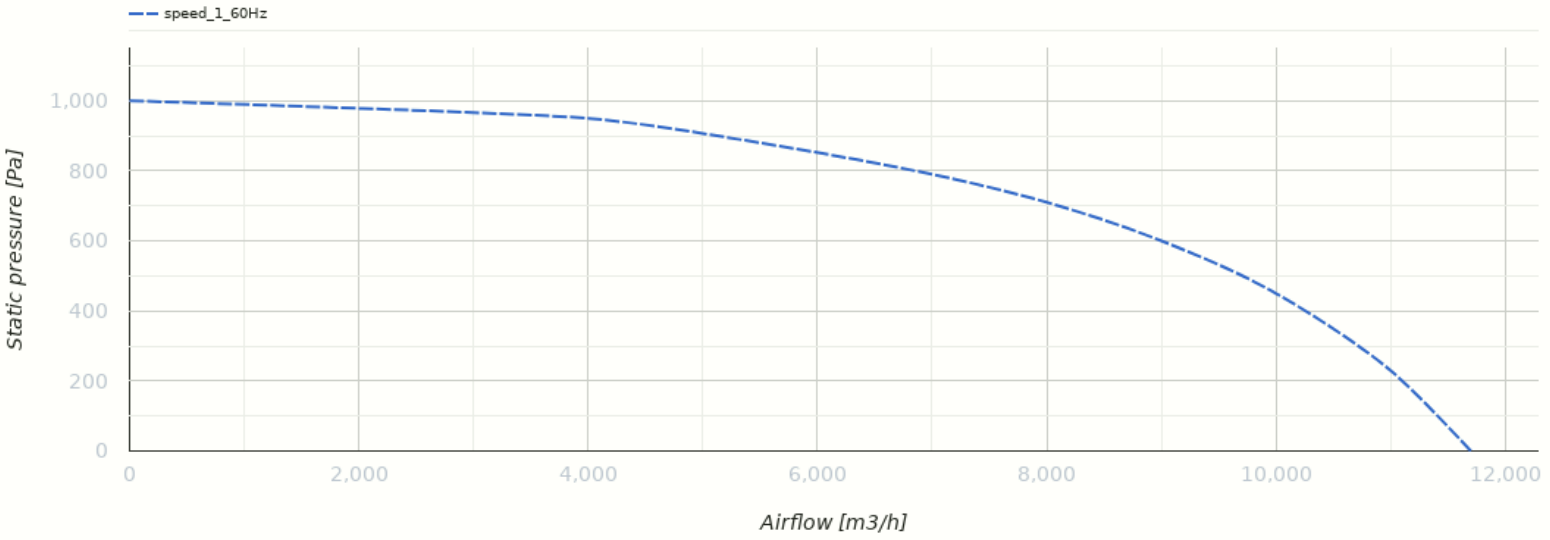

Dimensions

H	H1	L	L1	W	W1	W2	H2
820	858	820	858	820	858	321	760

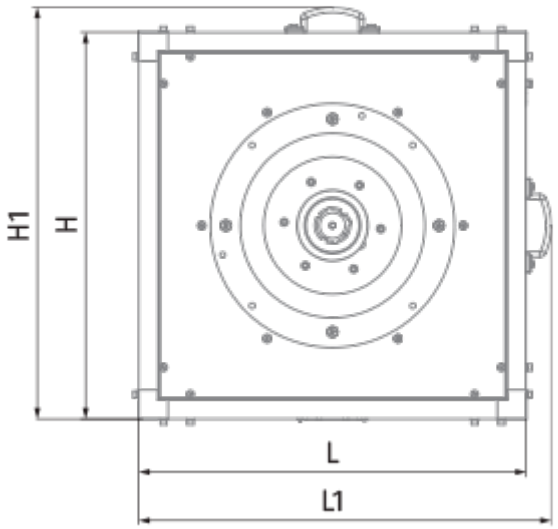

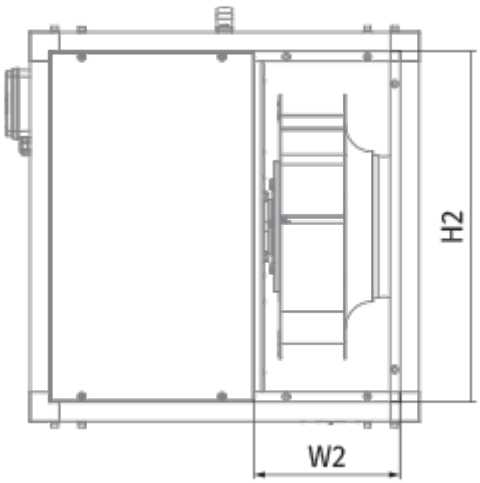
H2
W2

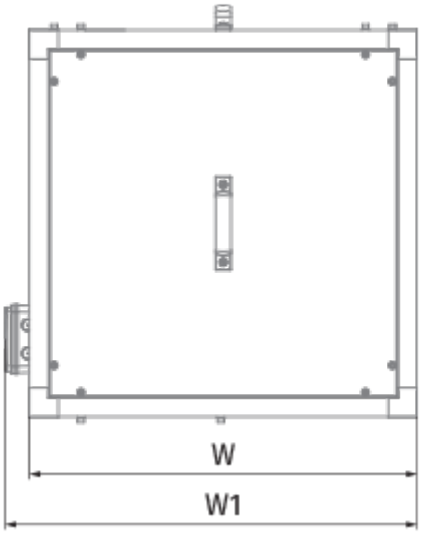
W
W1