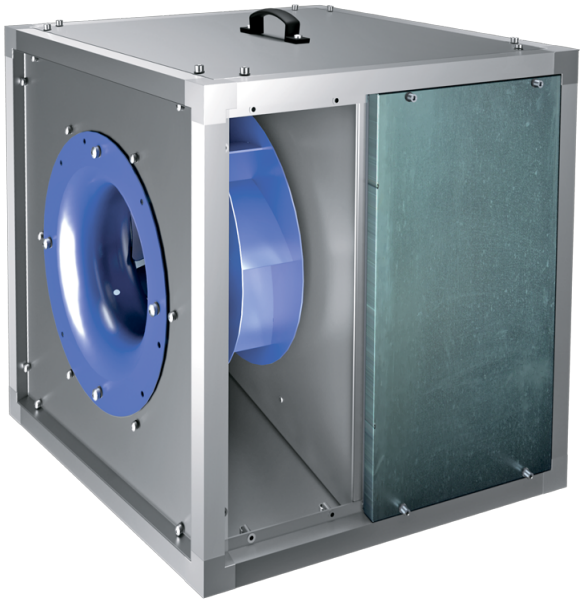

Iso-VK EC 560 D

Kitchen inline fans in sound-insulated casings with operational temperature of 120 °C with EC-motors

- Sound-insulated casing
- Impeller type: Centrifugal impeller with backward curved blades
- Casing material: Aluzinc
- Installation in any position

	Unit of measurement	Iso-VK EC 560 D
Phases	-	3
Minimum supply voltage	V	400
Maximum supply voltage	V	400
Power supply frequency	Hz	50/60
Maximum airflow	m^3/h	15700
Weight	kg	113
Transported air temperature (max)	°C	120
Transported air temperature (min)	°C	-25
Maximum transported air temperature	-	120°C CONTINUOUS
Ingress protection rating	-	IPX4
Impeller material	-	Steel
Size	mm	560

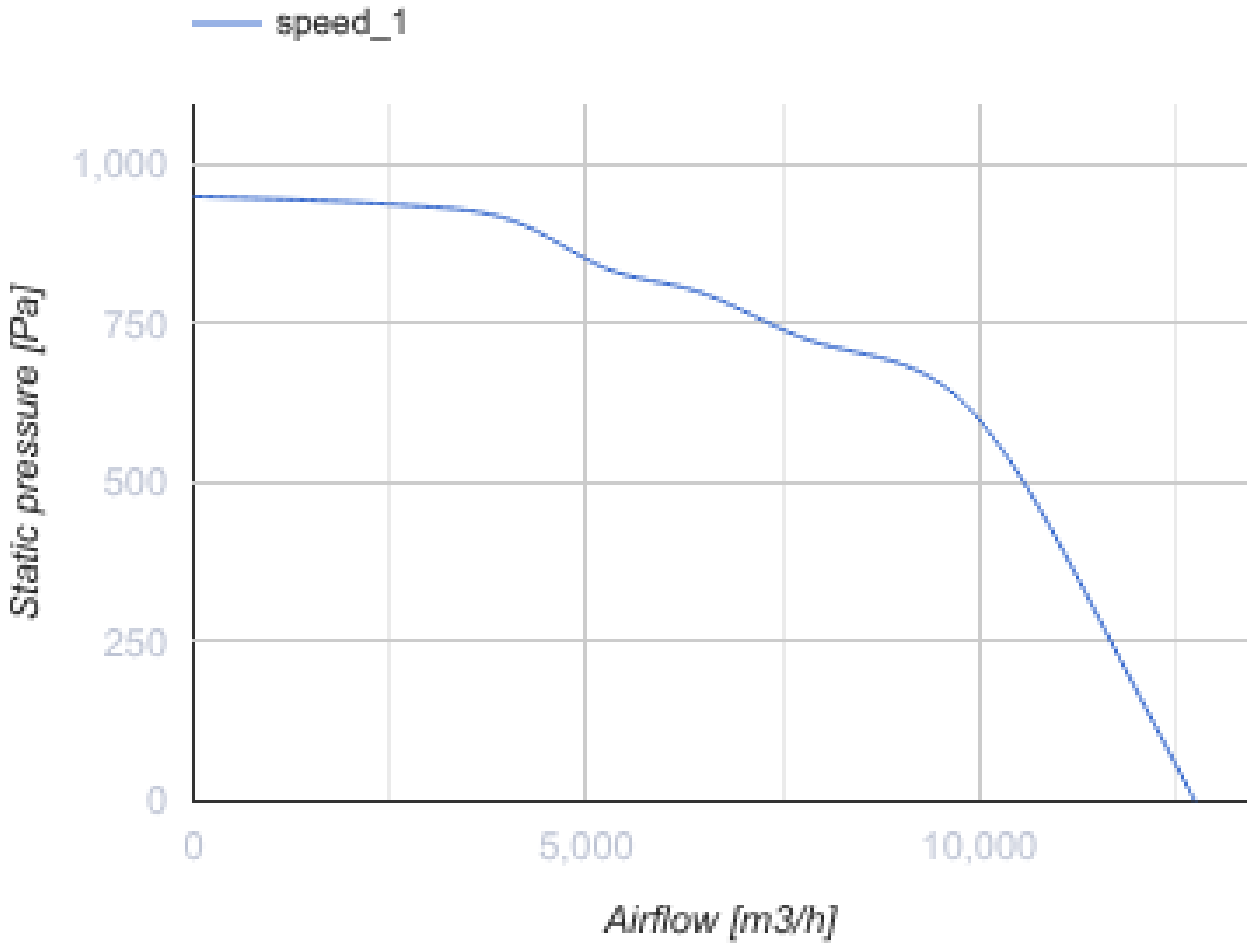
speed_1
1,000
750
500
250
0
Static pressure [Pa]
0
5,000
10,000
Airflow [m3/h]

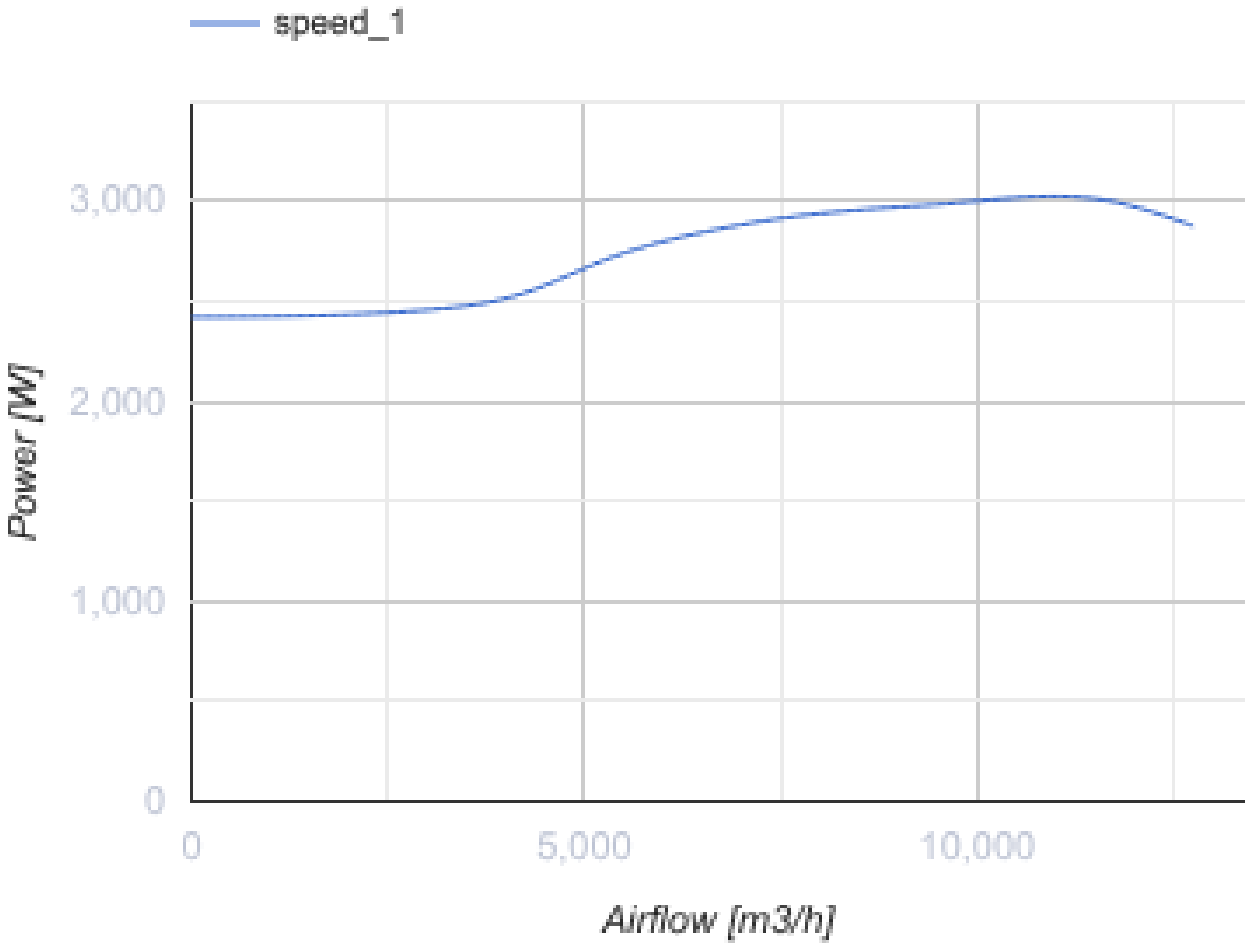

Dimensions

H	H1	H2	L	L1	W	W1	W2
900	938	840	900	938	900	938	365

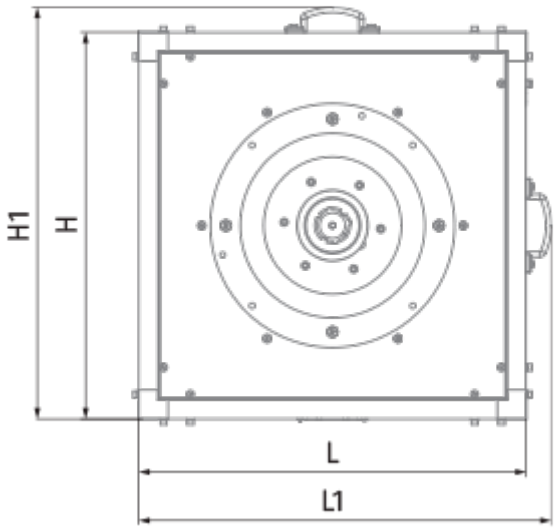
H1
H
L
L1

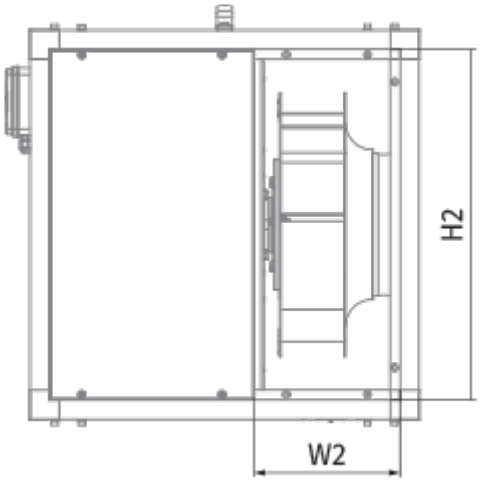
H2
W2

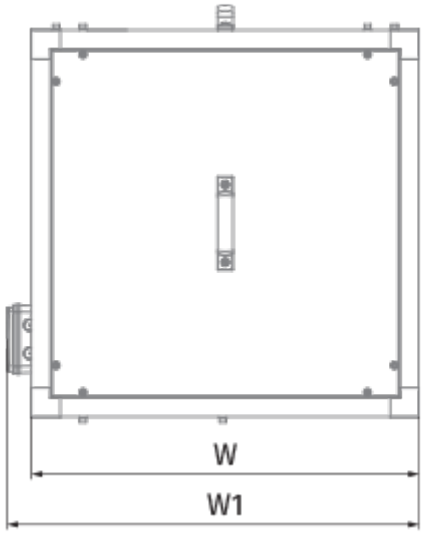
W
W1

Accessories

EC motors regulators

Name	Photo	Description
CDT E/0-10		Speed control for EC motors