

Kamin 150 KF

Chimney fans

• Impeller type: Centrifugal impeller with forward curved blades
• Casing material: Galvanized steel
• Installation in any position

	Unit of measurement	Kamin 150 KF
Phases	-	1
Minimum supply voltage	V	230
Maximum supply voltage	V	230
Power supply frequency	Hz	50
Maximum airflow	m³/h	520
Weight	kg	9.7
Transported air temperature (max)	°C	150
Ingress protection rating	-	IPX2
Impeller material	-	Galvanized steel
Size	mm	150

Dimensions

Ø D	B	H	H1	L	P
149	285	650	600	300	50

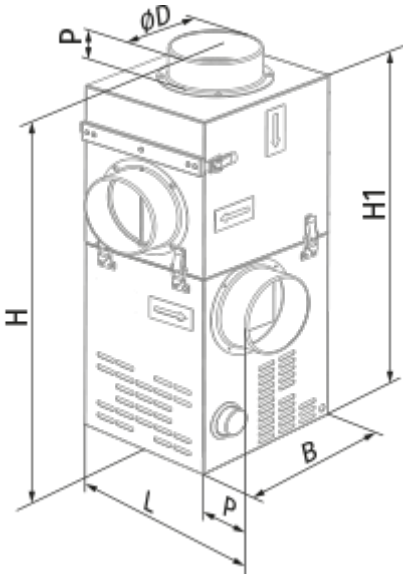
P
ØD
H1
H
B
L
P