

# Kamin 160 AF

Chimney fans

• Impeller type: Centrifugal impeller with forward curved blades
• Casing material: Galvanized steel
• Installation in any position

| | Unit of measurement | Kamin 160 AF |
|---|---|---|
| Phases | - | 1 |
| Minimum supply voltage | V | 230 |
| Maximum supply voltage | V | 230 |
| Power supply frequency | Hz | 50 |
| Maximum airflow | m³/h | 540 |
| Weight | kg | 8.7 |
| Transported air temperature (max) | °C | 150 |
| Ingress protection rating | - | IPX2 |
| Impeller material | - | Galvanized steel |
| Size | mm | 160 |

## Dimensions

| Ø D | B | H | H1 | L | P |
|---|---|---|---|---|---|
| 159 | 285 | 540 | 490 | 300 | 50 |

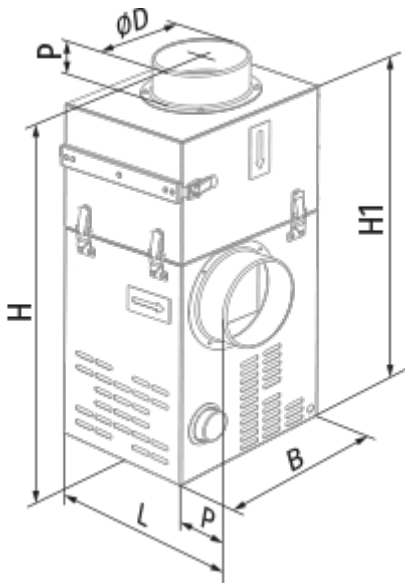
ØD
P
H
H1
B
L
P