

KFK 90x50-3

Duct DX cooling units for rectangular air ducts

- Casing material: Galvanized steel

	Unit of measurement	KFK 90x50-3
Weight	kg	31.5

Dimensions

ØD1	ØD2	B	B1	B2	H	H1	H2	L
22	28	900	940	970	500	595	340	44

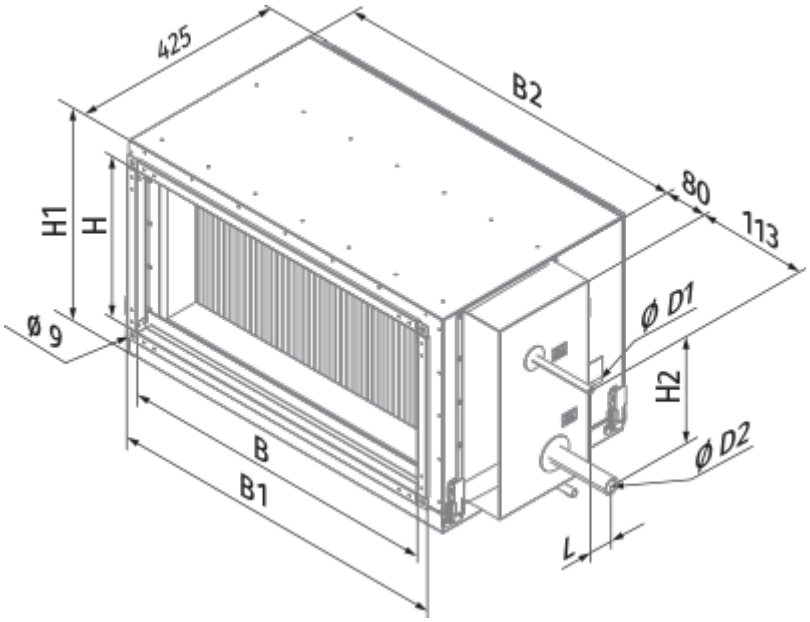
425
B2
80
113
H1
H
Ø 9
Ø D1
H2
Ø D2
B
B1
L