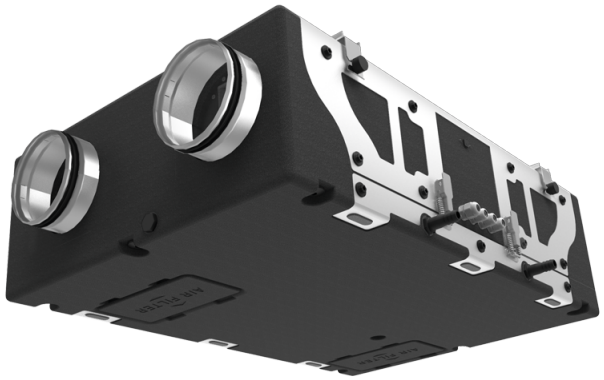

KOMFORT EC D5B 180-E S21

Heat and energy recovery air handling units

- Heat exchanger type: Counter flow
- Heat exchanger material: Enthalpy
- Sound-insulated casing
- Enthalpy heat exchanger
- Bypass: Auto
- Reheater: Optional
- Preheater: Optional
- BMS protocol: ModBus
- Control: Smartphone
- Casing material: EPP
- Installation in any position
- Humidity sensor: Optional
- CO2 sensor: Optional
- PM2.5 sensor: Optional

	Unit of measurement	KOMFORT EC D5B 180-E S21
Phases	-	1
Minimum supply voltage	V	230
Maximum supply voltage	V	230
Power supply frequency	Hz	50/60
Maximum airflow	m³/h	220
Heat recovery efficiency, max	%	94
Heat exchanger type	-	Counter flow
Heat exchanger material	-	Enthalpy
Weight	kg	14
Transported air temperature (max)	°C	40
Transported air temperature (min)	°C	-25
Ambient air temperature min	°C	1
Ambient air temperature max	°C	40
Ingress protection rating	-	IP22
Ambient air humidity max	%	60
Ingress protection rating of the drive	-	IP44

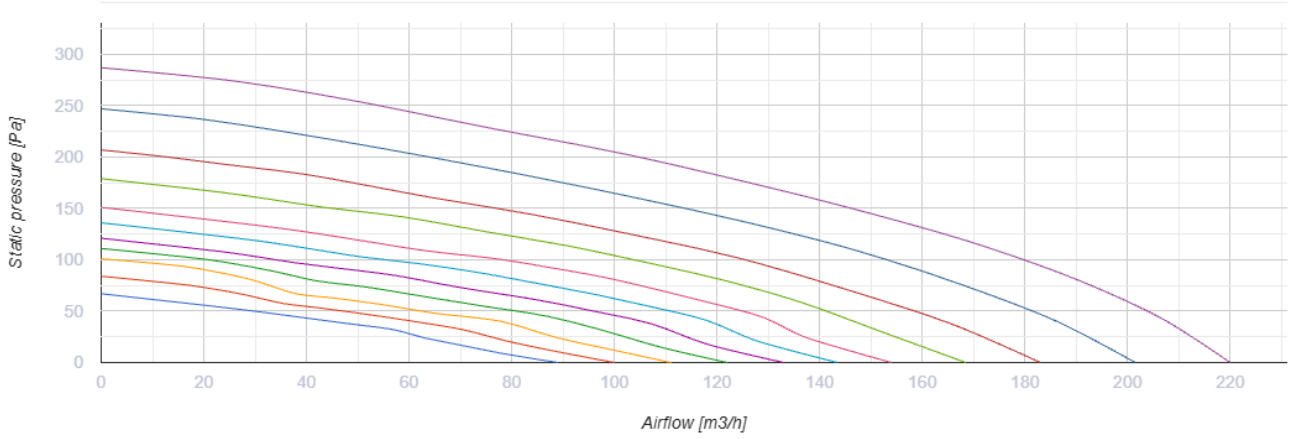

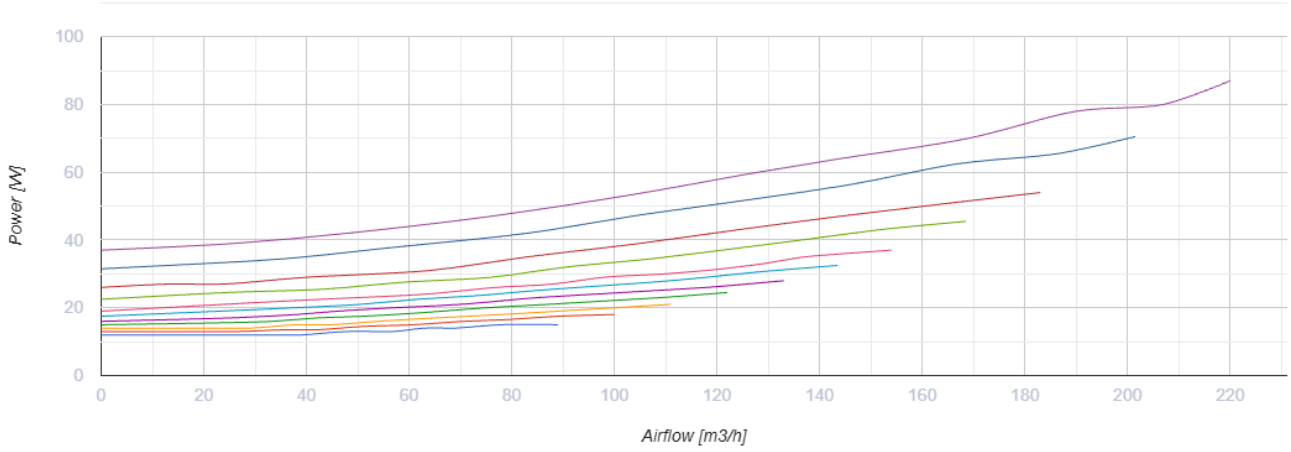

Dimensions

Ø D	Ø D1	B	B1	B2	B3	L	L1	L2	H	H1	H2
150	-	650	600	326	163	900	1009	302	264	110	-

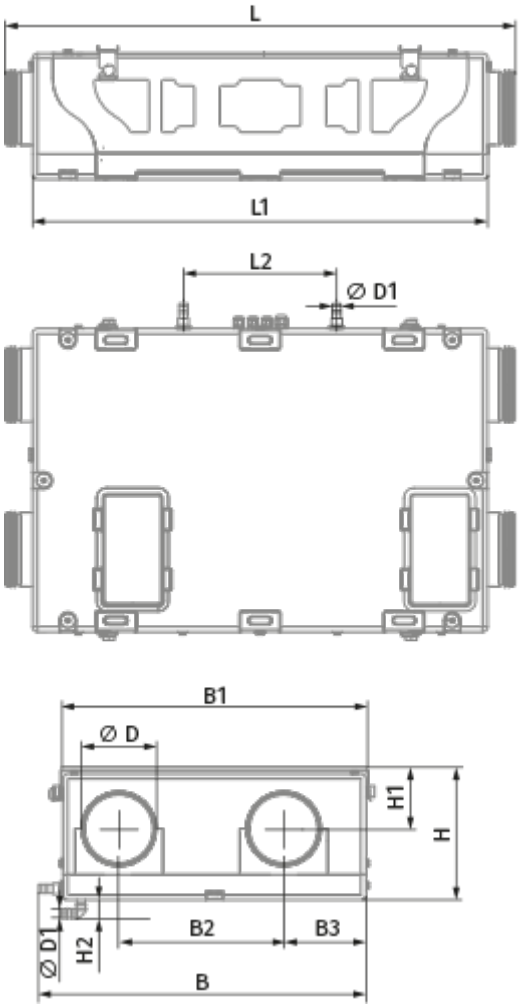

Accessories

For round ducts

Name	Photo	Description
SD 150/600		Silencers for round ducts
SD 150/900		Silencers for round ducts
SD 150/1200		Silencers for round ducts

For round ducts

Name	Photo	Description

VKA 150		Air dampers for round ducts

Electrical heaters

Name	Photo	Description
EVH 150-0.8-1 S21 V.2		Electric duct preheater for heat exchanger freeze protection
EVH 150-1.2-1 S21 V.2		Electric duct preheater for heat exchanger freeze protection
EVH 150-1.7-1 S21 V.2		Electric duct preheater for heat exchanger freeze protection
EVH 150-2.0-1 S21 V.2		Electric duct preheater for heat exchanger freeze protection
ENH 150-0.8-1 S21 V.2		Duct heater for supply air reheating
ENH 150-1.2-1 S21 V.2		Duct heater for supply air reheating
ENH 150-1.7-1 S21 V.2		Duct heater for supply air reheating
ENH 150-2.0-1 S21 V.2		Duct heater for supply air reheating

Control Panels

Name	Photo	Description
S25		LCD control panel
S22		Control panels
S22 Wi-Fi		Control panels

CO2 sensors

Name	Photo	Description
CD-1		CO2 sensors
CD-2		CO2 sensors

Humidity sensors

Name	Photo	Description
FS2		Humidity sensor

Other accessories

Name	Photo	Description
FP 214x186x48 F7		F7 panel filter
FP 214x186x18 G4		G4 panel filter