

KOMFORT EC DBE 300-E L S21 DTV

Suspended heat recovery air handling units

- Power of electrical reheater: 1500
- Heat exchanger type: Counter flow
- Heat exchanger material: Enthalpy
- Sound-insulated casing
- Enthalpy heat exchanger
- Bypass: Auto
- Reheater: Electric
- Preheater: Optional
- BMS protocol: ModBus
- Control: Smartphone
- Casing material: Galvanized steel
- Humidity sensor: Optional
- CO2 sensor: Optional
- PM2.5 sensor: Optional

	Unit of measurement	KOMFORT EC DBE 300-E L S21 DTV
Phases	-	1
Minimum supply voltage	V	230
Maximum supply voltage	V	230
Power supply frequency	Hz	50/60
Power of electrical reheater	W	1500
Maximum airflow	m³/h	340
Heat recovery efficiency, max	%	87
Heat exchanger type	-	Counter flow
Heat exchanger material	-	Enthalpy
Weight	kg	44
Transported air temperature (max)	°C	40
Transported air temperature (min)	°C	-25
Ambient air temperature max	°C	40
Ambient air temperature min	°C	1
Ingress protection rating	-	IP22
Ambient air humidity max	%	60
Ingress protection rating of the drive	-	IP44

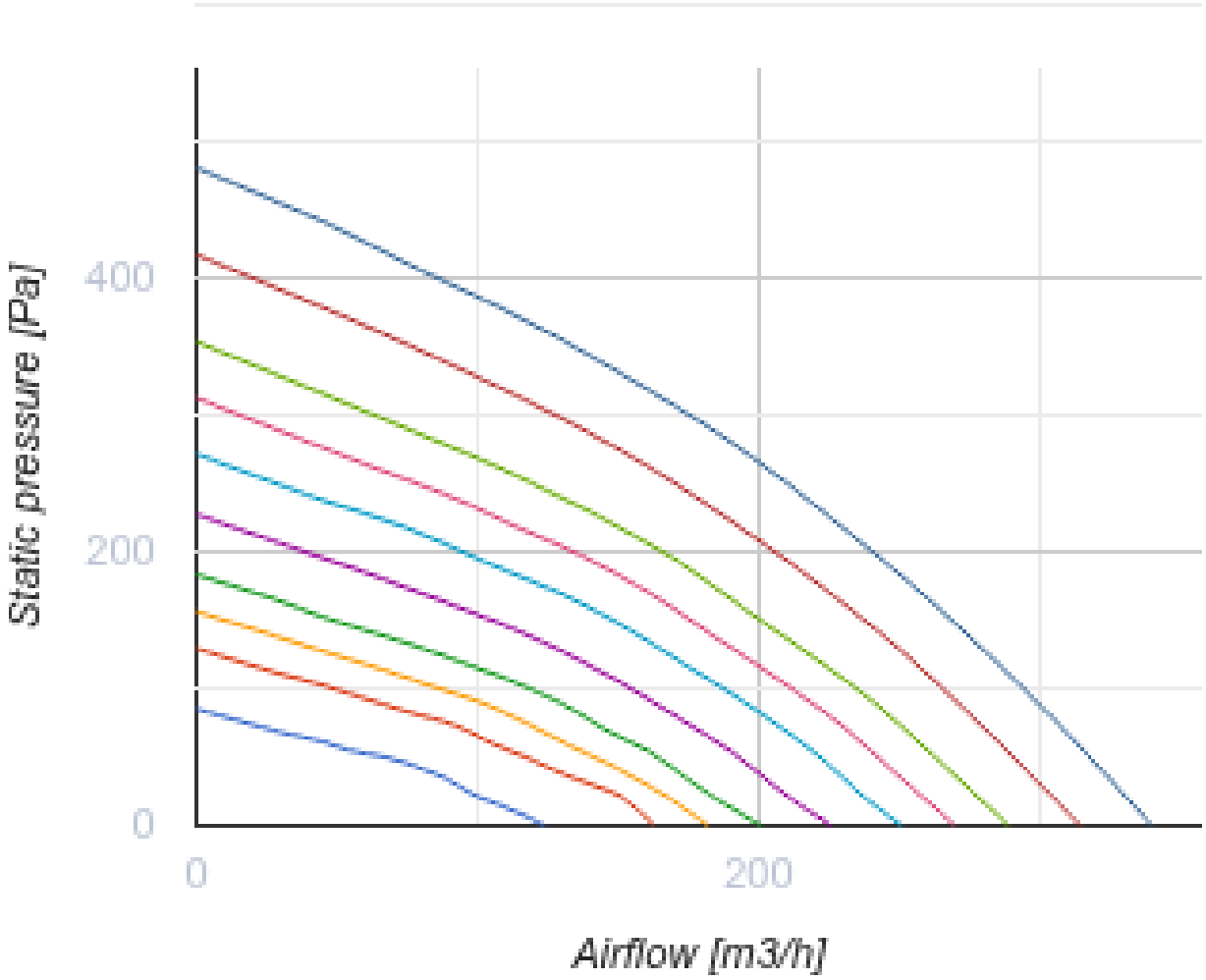
Static pressure [Pa]
400
200
0
0
200
Airflow [m3/h]

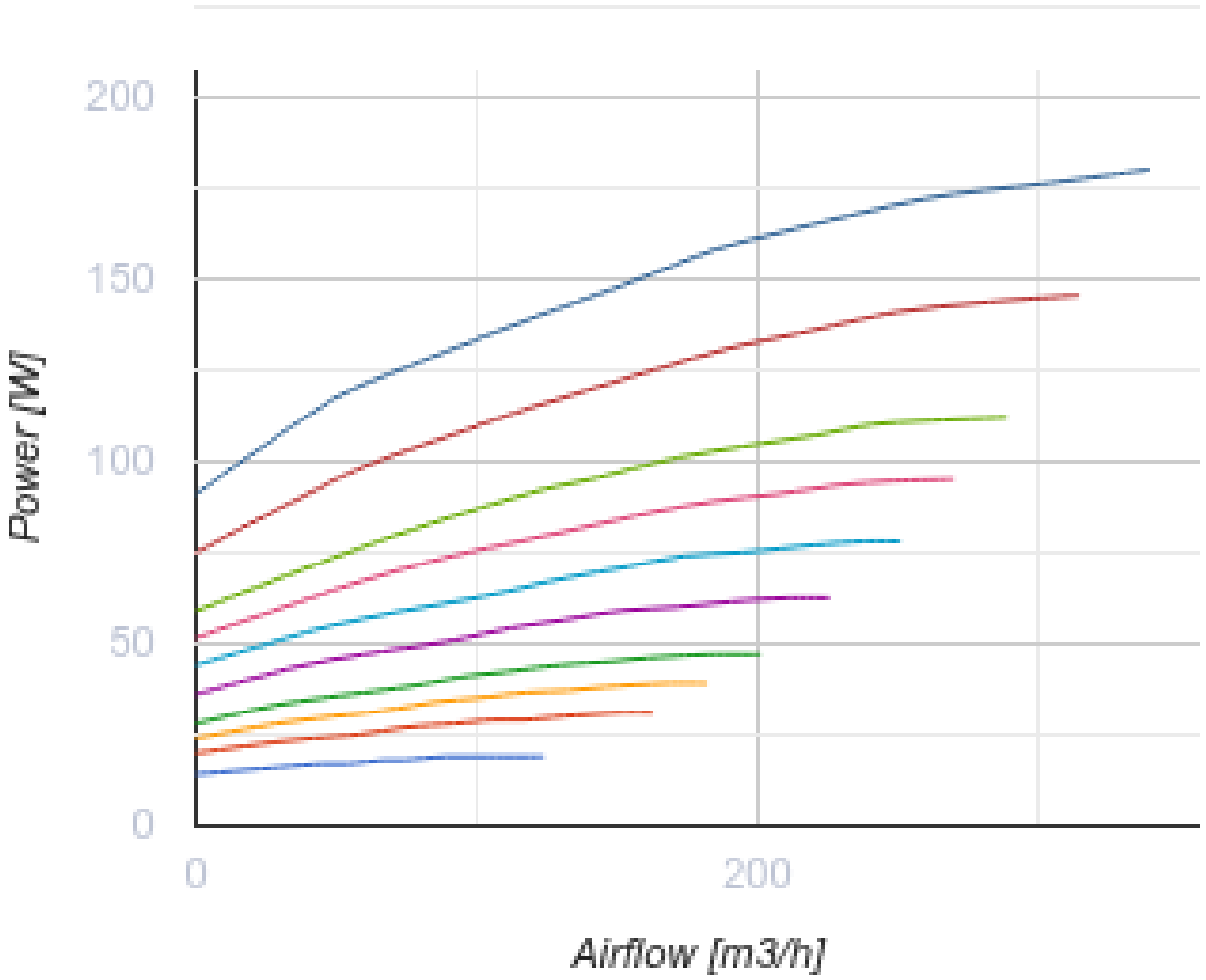

Dimensions

Ø D	B	B1	H	L	L1
160	485	577	290	1238	1291

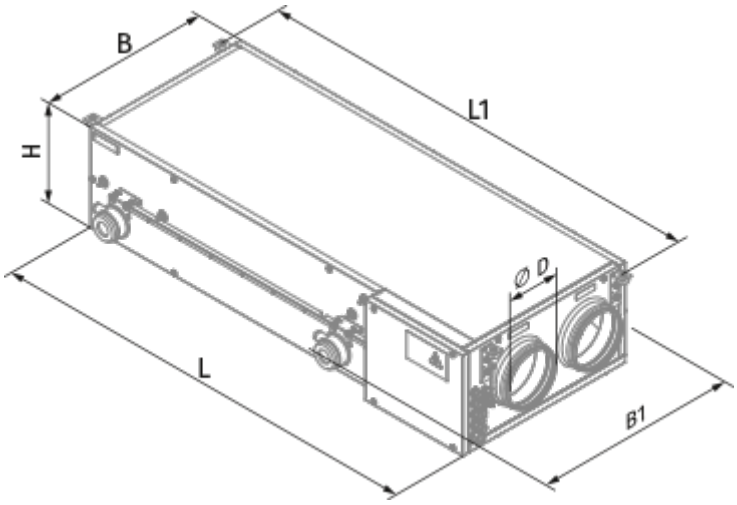
B
L1
H
Ø D
L
B1

Ecodesign

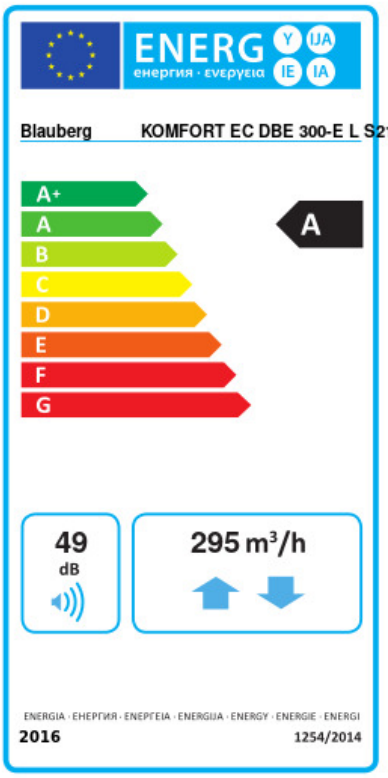

Trademark	Blauberg					
Model	KOMFORT EC DBE 300-E L S21 DTV					
Specific energy consumption (SEC) (kWh/(m²/a))	Cold		Average		Warm	
	-74.5	A+	-38.3	A	-15	E
Type of ventilation unit	Bidirectional					
Type of drive installed	Variable speed					
Type of heat recovery system	Recuperative					
Thermal efficiency of heat recovery (%)	73					
Maximum flow rate (m³/h)	295					
Electric power input (W)	174					
Reference flow rate (m³/s)	0.061					
Reference pressure difference (Pa)	50					
Specific power input (SPI) (W/(m³/h))	0.35					
Control typology	Local demand control					
Maximum internal leakage rates (%)	2.7					
Maximum external leakage rates (%)	2.7					
Declared typology	RVU BVU					
Sound power level (dB(A))	49					
The annual electricity consumption (AEC) (kWh/a)	Cold		Average		Warm	
	767		230		185	
The annual heating saved (AHS) (kWh/a)	Cold		Average		Warm	
	8493		4341		1963	

Accessories

For round ducts

Name	Photo	Description
SD 160/600		Silencers for round ducts
SD 160/900		Silencers for round ducts

SD 160/1200		Silencers for round ducts

For round ducts

Name	Photo	Description
VRV 160		Backdraft dampers with spring for round ducts
VKA 160		Air dampers for round ducts

Electrical heaters

Name	Photo	Description
EVH 160-0.8-1 S21 V.2		Electric duct preheater for heat exchanger freeze protection
EVH 160-1.2-1 S21 V.2		Electric duct preheater for heat exchanger freeze protection
EVH 160-1.7-1 S21 V.2		Electric duct preheater for heat exchanger freeze protection
EVH 160-2.0-1 S21 V.2		Electric duct preheater for heat exchanger freeze protection

Control Panels

Name	Photo	Description
S25		LCD control panel
S22		Control panels
S22 Wi-Fi		Control panels

CO2 sensors

Name	Photo	Description

CD-1		CO2 sensors
CD-2		CO2 sensors

Humidity sensors

Name	Photo	Description
FS2		Humidity sensor

Other accessories

Name	Photo	Description
FP 440x128x20 G4		G4 panel filter

Electric actuators

Name	Photo	Description
Belimo TF230		Electric actuators