

KOMFORT ERV D 250 R S20

Suspended heat and energy recovery air handling units

- Heat exchanger type: Cross flow
- Heat exchanger material: Enthalpy
- Sound-insulated casing
- Enthalpy heat exchanger
- Control: Speed controller
- Casing material: Coated steel

	Unit of measurement	KOMFORT ERV D 250 R S20
Phases	-	1
Minimum supply voltage	V	230
Maximum supply voltage	V	230
Power supply frequency	Hz	50/60
Maximum airflow	m³/h	370
Heat recovery efficiency, max	%	76
Heat exchanger type	-	Cross flow
Heat exchanger material	-	Enthalpy
Weight	kg	29
Transported air temperature (max)	°C	40
Transported air temperature (min)	°C	-5
Ambient air temperature min	°C	1
Ambient air temperature max	°C	40
Ingress protection rating	-	IP22
Ingress protection rating of the drive	-	IP44
Ambient air humidity max	%	80

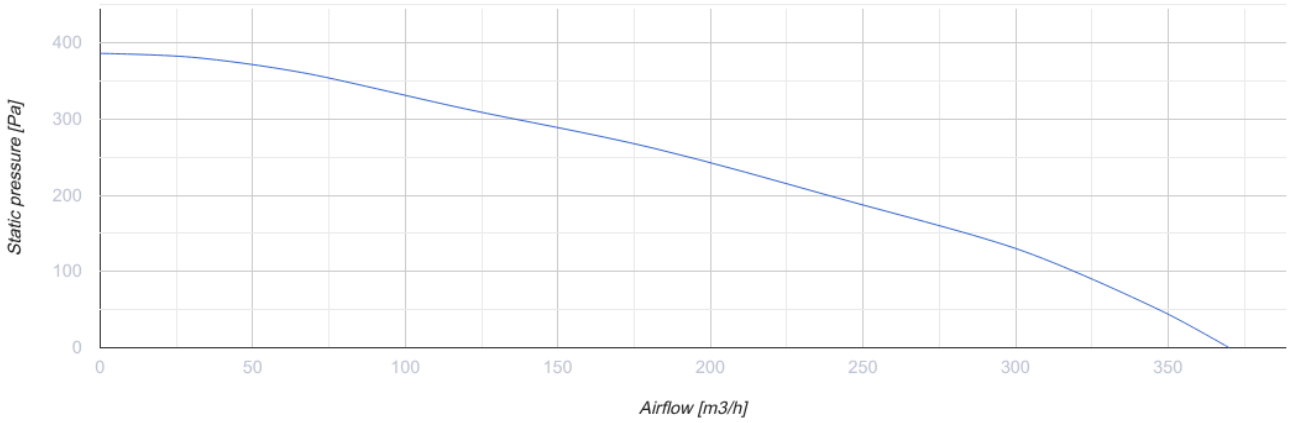

Dimensions

D	B	H	L	L1
149	704	227	854	947

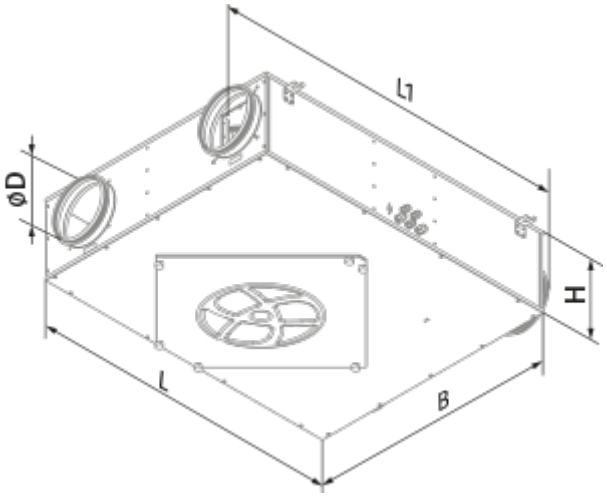

Ecodesign

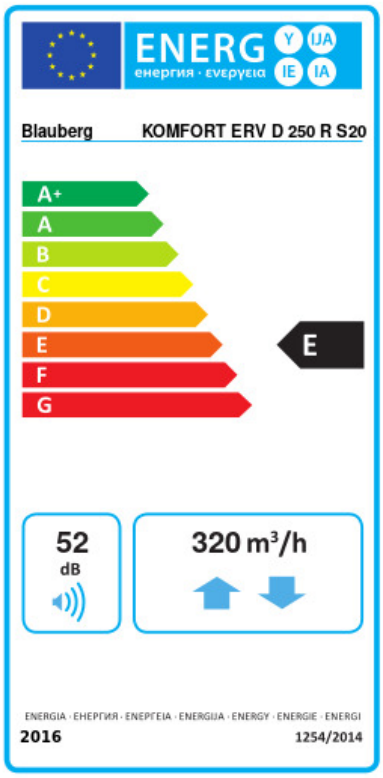

Trademark	Blauberg					
Model	KOMFORT ERV D 250 R S20					
Specific energy consumption (SEC) (kWh/(m²/a))	Cold		Average		Warm	
	-47.9	A+	-15.5	E	5.6	G
Type of ventilation unit	Bidirectional					
Type of drive installed	Variable speed					
Type of heat recovery system	Recuperative					
Thermal efficiency of heat recovery (%)	70					
Maximum flow rate (m³/h)	320					
Electric power input (W)	240					
Reference flow rate (m³/s)	0.062					
Reference pressure difference (Pa)	50					
Specific power input (SPI) (W/(m³/h))	0.75					
Control typology	Manual control					
Maximum internal leakage rates (%)	2.7					
Maximum external leakage rates (%)	2.7					
Sound power level (dB(A))	52					
Declared typology	RVU BVU					
The annual electricity consumption (AEC) (kWh/a)	Cold		Average		Warm	
	1522		985		940	
The annual heating saved (AHS) (kWh/a)	Cold		Average		Warm	
	7094		3626		1640	

Accessories

Other accessories

Name	Photo	Description
FP 300x220x48 G4		G4 panel filter