

KOMFORT LE 2200-18

Heat recovery air handling units

- Power of electrical reheater: 18000
- Heat exchanger type: Cross flow
- Heat exchanger material: Polystyrene
- Sound-insulated casing
- Reheater: Electric
- Control: Wired control panel
- Casing material: Galvanized steel

	Unit of measurement	KOMFORT LE 2200-18
Phases	-	3
Maximum supply voltage	V	230
Minimum supply voltage	V	230
Power supply frequency	Hz	50/60
Power of electrical reheater	W	18000
Maximum airflow	m³/h	2200
Heat recovery efficiency, max	%	77
Heat exchanger type	-	Cross flow
Heat exchanger material	-	Polystyrene
Weight	kg	96
Transported air temperature (max)	°C	40
Transported air temperature (min)	°C	-25
Ambient air temperature min	°C	1
Ambient air temperature max	°C	40
Ingress protection rating	-	IP22
Ingress protection rating of the drive	-	IP44
Ambient air humidity max	%	80

Dimensions

ØD	B	B1	H	H1	L	L1	L2
314	842	581	814	947	1345	1394	1447

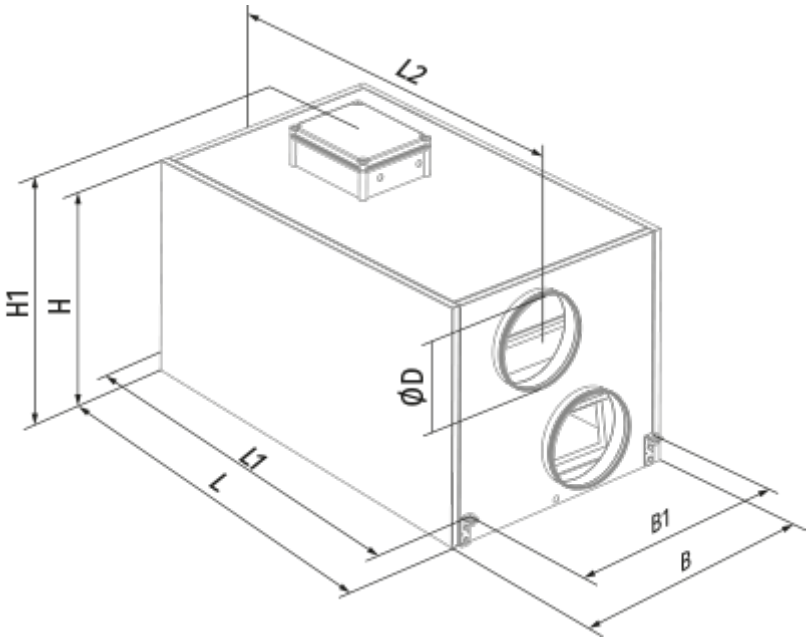

Accessories

For round ducts

Name	Photo	Description
SD 315/600		Silencers for round ducts
SD 315/900		Silencers for round ducts
SD 315/1200		Silencers for round ducts
SDF 315/600		Flexible silencers for round ducts
SDF 315/900		Flexible silencers for round ducts

SDF 315/2000		Flexible silencers for round ducts

For round ducts

Name	Photo	Description
VRV 315		Backdraft dampers with spring for round ducts

Other accessories

Name	Photo	Description
FP 780x273x48 G4		G4 panel filter