

# KOMFORT Roto EC DE 350 R S21

Suspended heat recovery air handling units

- Power of electrical reheater: 1400
- Heat exchanger type: Rotary
- Heat exchanger material: Aluminum
- Sound-insulated casing
- Reheater: Electric
- BMS protocol: ModBus
- Control: Smartphone
- Casing material: Coated steel
- Humidity sensor: Optional
- CO2 sensor: Optional
- PM2.5 sensor: Optional

| | Unit of measurement | KOMFORT Roto EC DE 350 R S21 |
|---|---|---|
| Phases | - | 1 |
| Minimum supply voltage | V | 230 |
| Maximum supply voltage | V | 230 |
| Power supply frequency | Hz | 50/60 |
| Power of electrical reheater | W | 1400 |
| Maximum airflow | m³/h | 430 |
| Heat recovery efficiency, max | % | 87 |
| Heat exchanger type | - | Rotary |
| Heat exchanger material | - | Aluminum |
| Weight | kg | 82 |
| Transported air temperature (max) | °C | 40 |
| Transported air temperature (min) | °C | -25 |
| Ambient air temperature max | °C | 40 |
| Ambient air temperature min | °C | 1 |
| Ingress protection rating | - | IP22 |
| Ambient air humidity max | % | 80 |
| Ingress protection rating of the drive | - | IP44 |

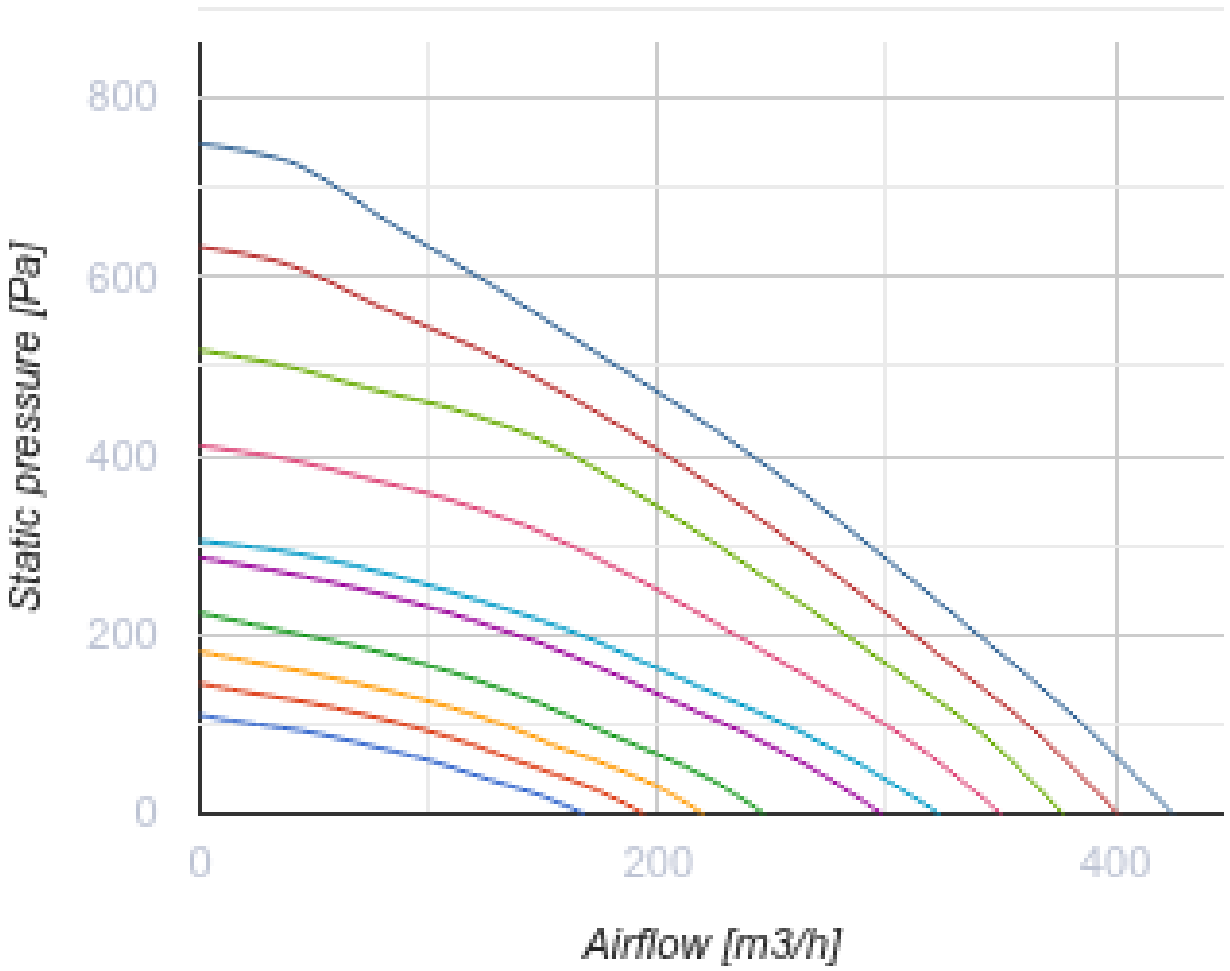
800
600
400
200
0
Static pressure [Pa]
0
200
400
Airflow [m3/h]

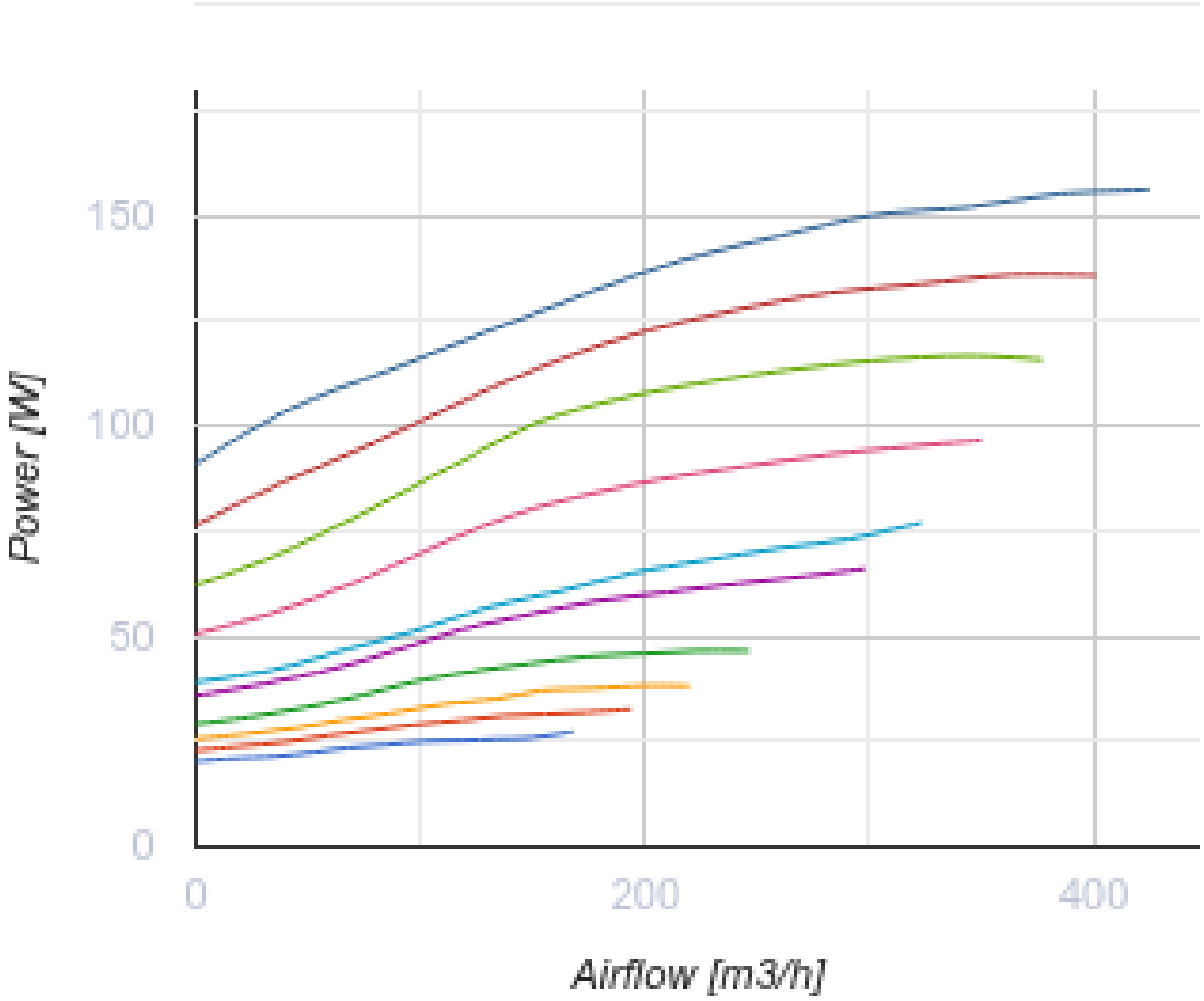


## Dimensions

| Ø D | Ø D1 | B | B1 | H | H1 | L | L1 |
|---|---|---|---|---|---|---|---|
| 160 | 125 | 770 | 818 | 318 | 361 | 1270 | 1365 |

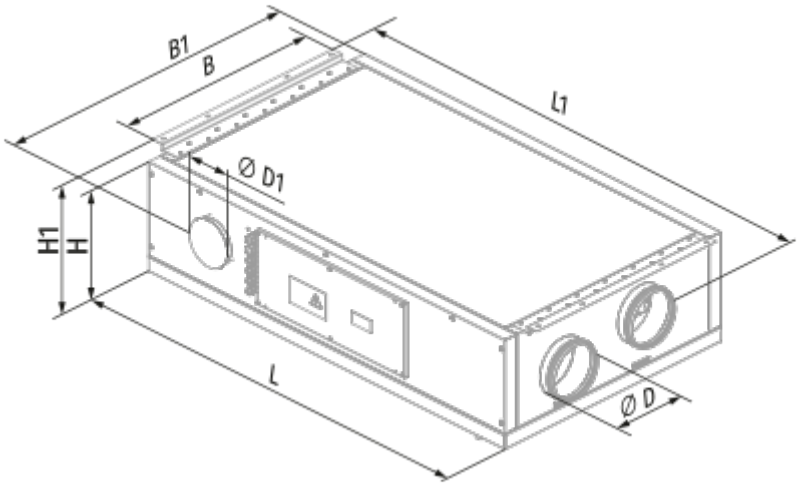
B1
B
L1
Ø D1
H1
H
L
Ø D

## Ecodesign

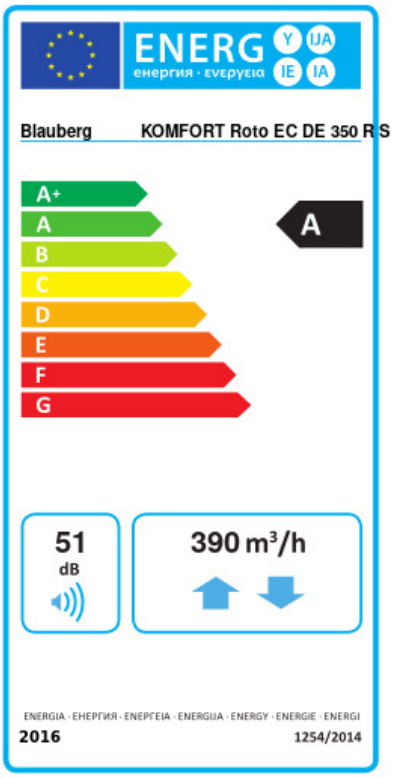


| Trademark | Blauberg | | | | | |
|---|---|---|---|---|---|---|
| Model | KOMFORT Roto EC DE 350 R S21 | | | | | |
| Specific energy consumption (SEC) (kWh/(m²/a)) | Cold | | Average | | Warm | |
| | -83.2 | A+ | -40.9 | A | -16.7 | E |
| Type of ventilation unit | Bidirectional | | | | | |
| Type of drive installed | Variable speed | | | | | |
| Type of heat recovery system | Regenerative | | | | | |
| Thermal efficiency of heat recovery (%) | 77 | | | | | |
| Maximum flow rate (m³/h) | 390 | | | | | |
| Electric power input (W) | 155 | | | | | |
| Reference flow rate (m³/s) | 0.081 | | | | | |
| Reference pressure difference (Pa) | 50 | | | | | |
| Specific power input (SPI) (W/(m³/h)) | 0.252 | | | | | |
| Control typology | Local demand control | | | | | |
| Maximum internal leakage rates (%) | 2.7 | | | | | |
| Maximum external leakage rates (%) | 2.7 | | | | | |
| Declared typology | RVU BVU | | | | | |
| Sound power level (dB(A)) | 51 | | | | | |
| The annual electricity consumption (AEC) (kWh/a) | Cold | | Average | | Warm | |
| | 133 | | 133 | | 133 | |
| The annual heating saved (AHS) (kWh/a) | Cold | | Average | | Warm | |
| | 8655 | | 4424 | | 2001 | |

## Accessories

### For round ducts

| Name | Photo | Description |
|---|---|---|
| VRV 160 |  | Backdraft dampers with spring for round ducts |
| VKA 160 |  | Air dampers for round ducts |

### Cooker Hoods

| Name | Photo | Description |
|---|---|---|
| DAH 251-13 |  | Kitchen exhaust hood |

### Control Panels

| Name | Photo | Description |
|---|---|---|
| S25 |  | LCD control panel |
| S22 |  | Control panels |
| S22 Wi-Fi |  | Control panels |

### Humidity sensors

| Name | Photo | Description |
|---|---|---|
| FS2 |  | Humidity sensor |

### Other accessories

| Name | Photo | Description |
|---|---|---|
| FP 320x235x48 F7 |  | F7 panel filter |
| FP 320x235x48 G4 |  | G4 panel filter |