

KOMFORT Roto EC LE 1200-6 S17

Air handling units with rotary heat exchanger

- Power of electrical reheater: 6000
- Heat exchanger type: Rotary
- Heat exchanger material: Aluminum
- Sound-insulated casing
- Reheater: Electric
- Control: Wired control panel
- Casing material: Galvanized steel
- Humidity sensor: Optional
- CO2 sensor: Optional
- PM2.5 sensor: Optional

	Unit of measurement	KOMFORT Roto EC LE 1200-6 S17
Phases	-	3
Minimum supply voltage	V	400
Maximum supply voltage	V	400
Power supply frequency	Hz	50/60
Power of electrical reheater	W	6000
Maximum airflow	m³/h	1200
Heat recovery efficiency, max	%	95
Heat exchanger type	-	Rotary
Heat exchanger material	-	Aluminum
Weight	kg	165
Transported air temperature (max)	°C	40
Transported air temperature (min)	°C	-25
Ambient air temperature min	°C	1
Ambient air temperature max	°C	40
Ingress protection rating	-	IP22
Ingress protection rating of the drive	-	IP44
Ambient air humidity max	%	80

Dimensions

ØD	B	B1	H	L
314	745	460	880	1335

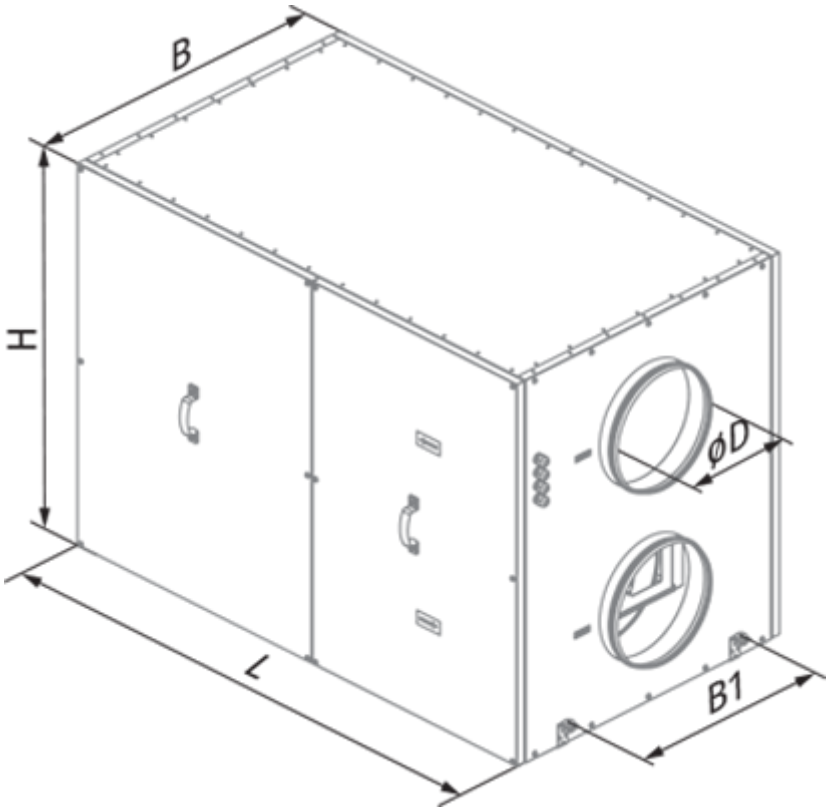

Accessories

For round ducts

Name	Photo	Description
SD 315/600		Silencers for round ducts
SD 315/900		Silencers for round ducts
SD 315/1200		Silencers for round ducts

For round ducts

Name	Photo	Description

VRV 315		Backdraft dampers with spring for round ducts
VRVS 315		Backdraft air dampers for round ducts

Humidity sensors

Name	Photo	Description
FS2		Humidity sensor

Other accessories

Name	Photo	Description
FP 700x410x48 G4		G4 panel filter