

KOMFORT Roto EC LEHP 700 S17

Compact heat recovery air handling units

- Power of electrical preheater: 2800
- Heat exchanger type: Rotary
- Heat exchanger material: Aluminum
- Sound-insulated casing
- Preheater: Built-in
- Control: Wired control panel
- Casing material: Aluzinc steel
- Humidity sensor: Optional
- CO2 sensor: Optional
- PM2.5 sensor: Optional

	Unit of measurement	KOMFORT Roto EC LEHP 700 S17
Phases	-	1
Minimum supply voltage	V	230
Maximum supply voltage	V	230
Power supply frequency	Hz	50
Power of electrical preheater	W	2800
Maximum airflow	m³/h	830
Heat recovery efficiency, max	%	85
Heat exchanger type	-	Rotary
Heat exchanger material	-	Aluminum
Weight	kg	160
Transported air temperature (max)	°C	40
Transported air temperature (min)	°C	-25
Ambient air temperature min	°C	1
Ambient air temperature max	°C	40
Ingress protection rating	-	IP22
Ingress protection rating of the drive	-	IP44
Ambient air humidity max	%	80

Dimensions

ØD	B	H	L
249	748	750	1667

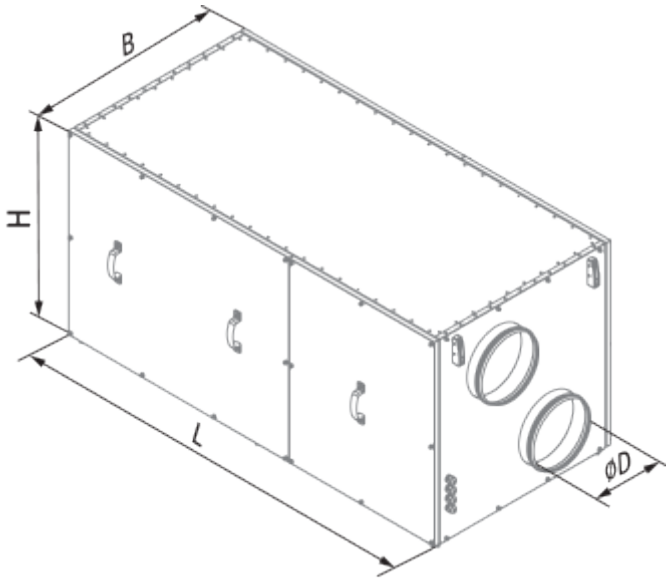

Accessories

For round ducts

Name	Photo	Description
VRV 250		Backdraft dampers with spring for round ducts
VKA 250		Air dampers for round ducts

Humidity sensors

Name	Photo	Description
FS2		Humidity sensor

Other accessories

Name	Photo	Description

FP 700x352x48 G4		G4 panel filter