

KOMFORT Roto EC LW 1500-2 S17

Air handling units with rotary heat exchanger

- Heat exchanger type: Rotary
- Heat exchanger material: Aluminum
- Sound-insulated casing
- Reheater: Water
- Control: Wired control panel
- Casing material: Aluzinc steel
- Humidity sensor: Optional
- CO2 sensor: Optional
- PM2.5 sensor: Optional

	Unit of measurement	KOMFORT Roto EC LW 1500-2 S17
Phases	-	1
Maximum supply voltage	V	230
Minimum supply voltage	V	230
Power supply frequency	Hz	50/60
Maximum airflow	m³/h	1500
Heat recovery efficiency, max	%	95
Heat exchanger type	-	Rotary
Heat exchanger material	-	Aluminum
Weight	kg	175
Transported air temperature (max)	°C	40
Transported air temperature (min)	°C	-25
Ambient air temperature min	°C	1
Ambient air temperature max	°C	40
Ingress protection rating	-	IP22
Ambient air humidity max	%	80
Ingress protection rating of the drive	-	IP44

Dimensions

ØD	B	B1	H	L
314	855	560	1010	1430

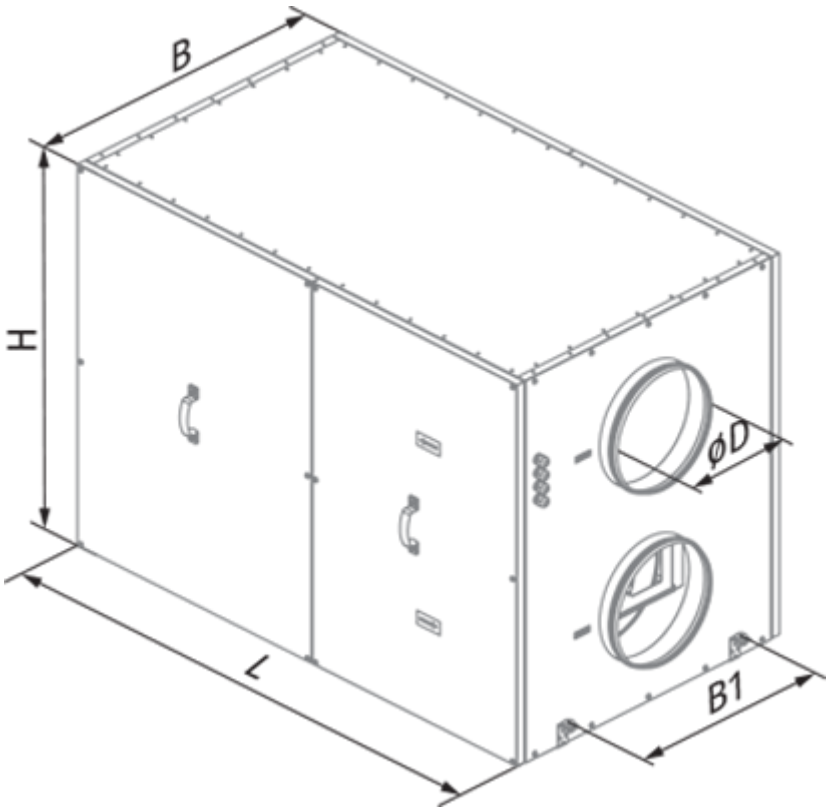

Accessories

For round ducts

Name	Photo	Description
SD 315/600		Silencers for round ducts
SD 315/900		Silencers for round ducts
SD 315/1200		Silencers for round ducts

For round ducts

Name	Photo	Description
VRV 315		Backdraft dampers with spring for round ducts

VRVS 315		Backdraft air dampers for round ducts

Mixing chambers

Name	Photo	Description
WMG 1-6		Water mixing units

Humidity sensors

Name	Photo	Description
FS2		Humidity sensor

Other accessories

Name	Photo	Description
FP 800x477x47 G4		G4 panel filter