

KOMFORT Ultra S 250-E S1 white

Compact heat recovery air handling units

- Heat exchanger type: Cross flow
- Heat exchanger material: Enthalpy
- Sound-insulated casing
- Enthalpy heat exchanger
- Control: Speed controller
- Casing material: Double-skinned white painted metal panels

	Unit of measurement	KOMFORT Ultra S 250-E S1 white
Phases	-	1
Minimum supply voltage	V	230
Maximum supply voltage	V	230
Power supply frequency	Hz	50/60
Maximum airflow	m³/h	250
Heat recovery efficiency, max	%	73
Heat exchanger type	-	Cross flow
Heat exchanger material	-	Enthalpy
Weight	kg	25
Transported air temperature (max)	°C	40
Transported air temperature (min)	°C	-25
Ambient air temperature min	°C	1
Ambient air temperature max	°C	40
Ingress protection rating	-	IP22
Ambient air humidity max	%	80
Ingress protection rating of the drive	-	IP44

Dimensions

D	B	H	H1	L	L1
125	300	443	490	713	43

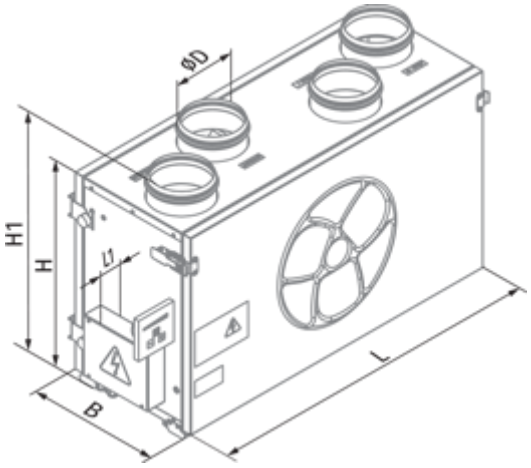

Accessories

For round ducts

Name	Photo	Description
SD 125/600		Silencers for round ducts
SD 125/900		Silencers for round ducts
SD 125/1200		Silencers for round ducts

For round ducts

Name	Photo	Description
VRV 125		Backdraft dampers with spring for round ducts

Other accessories

Name	Photo	Description

FP 240x184x40 G4		G4 panel filter