

# KOMFORT Ultra S 250-H S1 white

Compact heat recovery air handling units

- Heat exchanger type: Cross flow
- Heat exchanger material: Polystyrene
- Sound-insulated casing
- Control: Speed controller
- Casing material: Double-skinned white painted metal panels

| | Unit of measurement | KOMFORT Ultra S 250-H S1 white |
|---|---|---|
| Phases | - | 1 |
| Minimum supply voltage | V | 230 |
| Maximum supply voltage | V | 230 |
| Power supply frequency | Hz | 50/60 |
| Maximum airflow | m³/h | 250 |
| Heat recovery efficiency, max | % | 78 |
| Heat exchanger type | - | Cross flow |
| Heat exchanger material | - | Polystyrene |
| Weight | kg | 26 |
| Transported air temperature (max) | °C | 40 |
| Transported air temperature (min) | °C | -25 |
| Ambient air temperature max | °C | 40 |
| Ambient air temperature min | °C | 1 |
| Ingress protection rating | - | IP22 |
| Ambient air humidity max | % | 80 |
| Ingress protection rating of the drive | - | IP44 |

## Dimensions

| D | B | H | H1 | L | L1 |
|---|---|---|---|---|---|
| 125 | 300 | 443 | 490 | 713 | 43 |

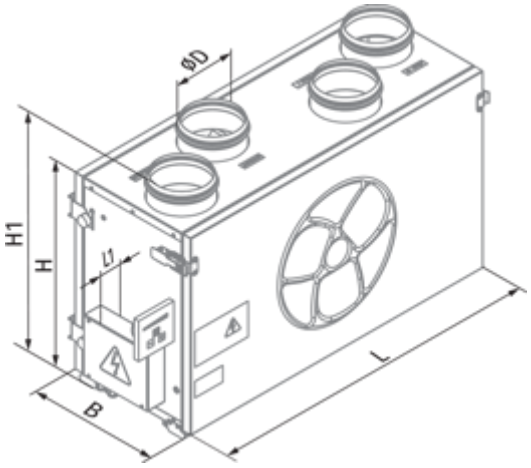


## Accessories

### For round ducts

| Name | Photo | Description |
|---|---|---|
| SD 125/600 |  | Silencers for round ducts |
| SD 125/900 |  | Silencers for round ducts |
| SD 125/1200 |  | Silencers for round ducts |

### For round ducts

| Name | Photo | Description |
|---|---|---|
| VRV 125 |  | Backdraft dampers with spring for round ducts |

### Other accessories

| Name | Photo | Description |
|---|---|---|

| | | |
|---|---|---|
| FP 240x184x40 G4 |  | G4 panel filter |