

KZ 80

Clamps for round ducts

- Casing material: Galvanized steel

	Unit of measurement	KZ 80

Dimensions

ØD	H
80	152

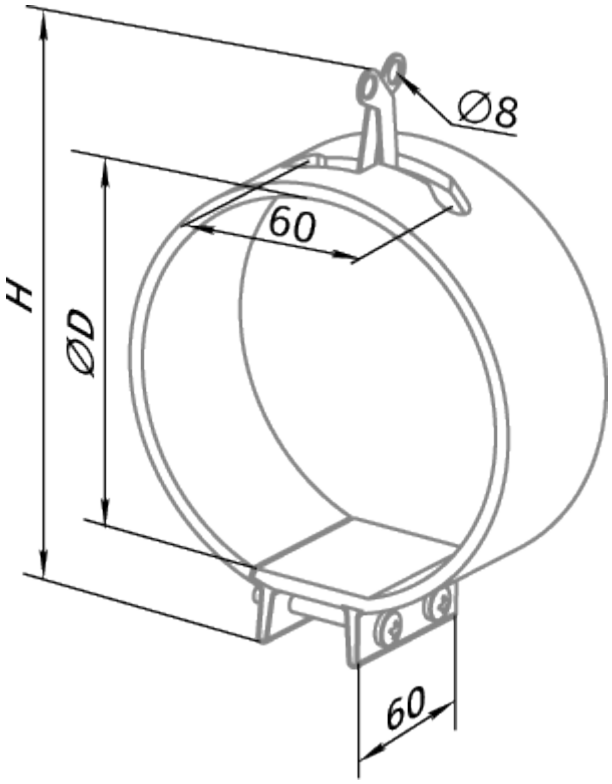
Ø8
60
H
ØD
60