

# Q-Matic 100 TR

Fans with an innovative mixed flow impeller, with automatic louver shutters for exhaust ventilation

- Impeller type: Mixed-flow
- Casing material: Plastic
- Timer: Turn off timer, Turn on timer

| | Unit of measurement | Q-Matic 100 TR |
|---|---|---|
| Minimum supply voltage | V | 220 |
| Maximum supply voltage | V | 240 |
| Power supply frequency | Hz | 50 |
| Maximum airflow | $m^3/h$ | 90 |
| Weight | kg | 0.63 |
| Ambient air temperature min | °C | 1 |
| Ambient air temperature max | °C | 40 |
| Ingress protection rating | - | IP24 |
| Impeller material | - | Plastic |

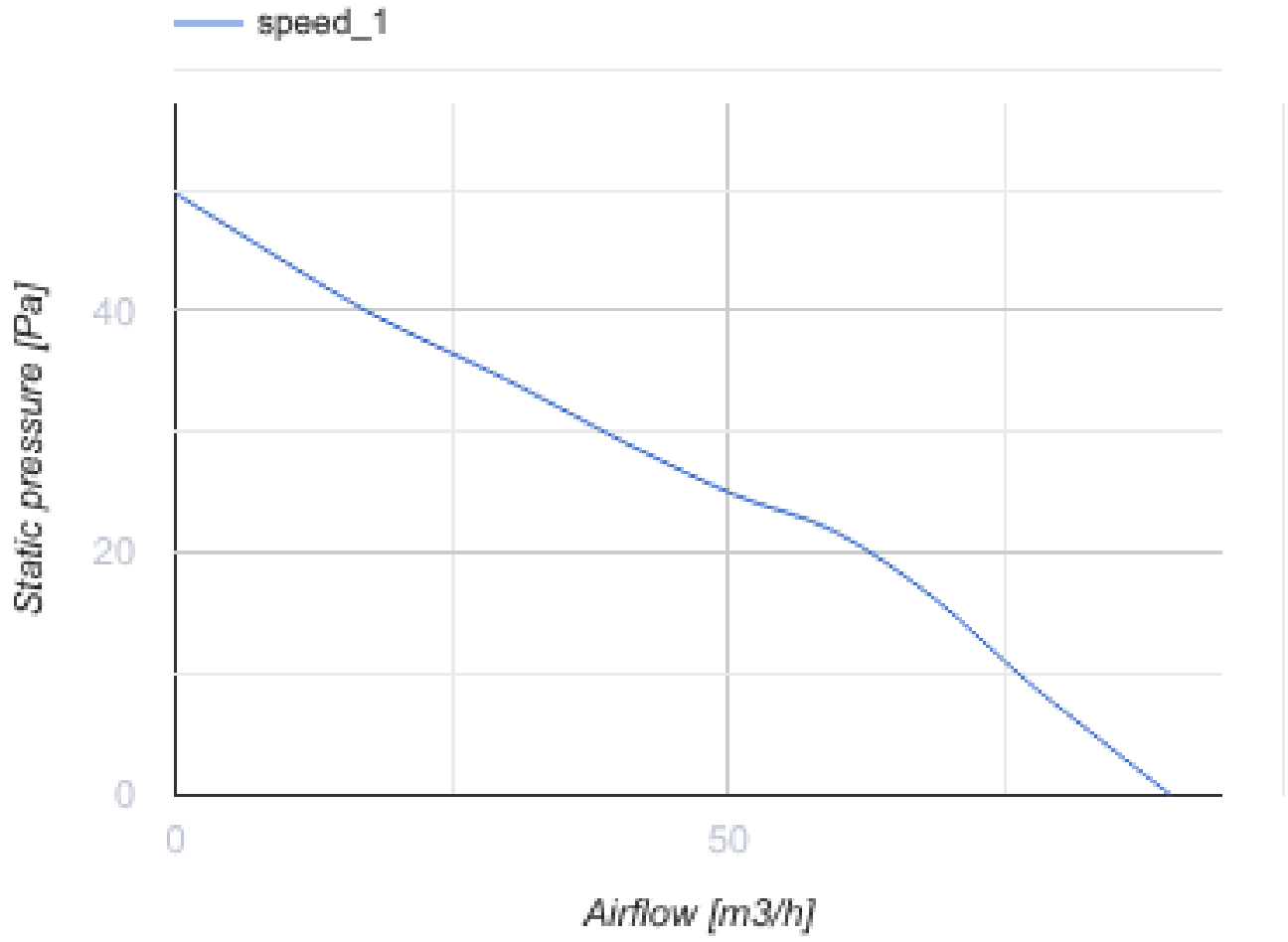


## Dimensions

| Ø D | L | L1 | W |
|---|---|---|---|
| 99 | 110 | 29 | 168 |

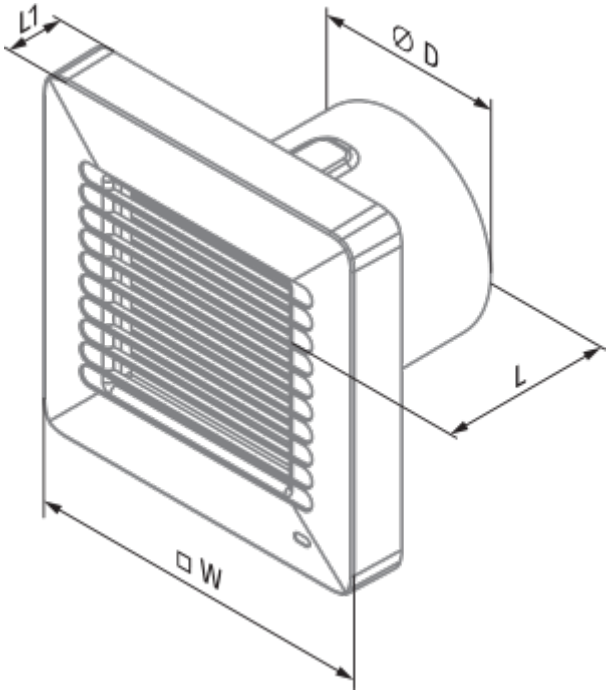
L1
⌀ D
L
□ W

## Ecodesign

| | | | | | | |
|---|---|---|---|---|---|---|
| Trademark | Blauberg | | | | | |
| Model | Q-Matic 100 TR | | | | | |
| Specific energy consumption (SEC) (kWh/(m²/a)) | Cold | | Average | | Warm | |
| | -33.4 | B | -15.4 | E | -5.2 | F |
| Type of ventilation unit | Unidirectional | | | | | |
| Type of drive installed | Single speed | | | | | |
| Type of heat recovery system | None | | | | | |
| Maximum flow rate (m³/h) | 90 | | | | | |
| Electric power input (W) | 10 | | | | | |
| Reference flow rate (m³/s) | 0.018 | | | | | |
| Specific power input (SPI) (W/(m³/h)) | 0.111 | | | | | |
| Control typology | Manual control | | | Clock control | | |
| Maximum external leakage rates (%) | 2.7 | | | | | |
| Declared typology | RVU UVU | | | | | |
| Sound power level (dB(A)) | 45 | | | | | |
| The annual electricity consumption (AEC) (kWh/a) | Cold | | Average | | Warm | |
| | 132 | | 132 | | 132 | |
| The annual heating saved (AHS) (kWh/a) | Cold | | Average | | Warm | |
| | 3667 | | 1874 | | 848 | |