

Q-Matic 100

Fans with an innovative mixed flow impeller, with automatic louver shutters for exhaust ventilation

- Impeller type: Mixed-flow
- Casing material: Plastic

	Unit of measurement	Q-Matic 100
Minimum supply voltage	V	220
Maximum supply voltage	V	240
Power supply frequency	Hz	50
Maximum airflow	m^3/h	90
Weight	kg	0.63
Ambient air temperature min	°C	1
Ambient air temperature max	°C	40
Ingress protection rating	-	IP24
Impeller material	-	Plastic

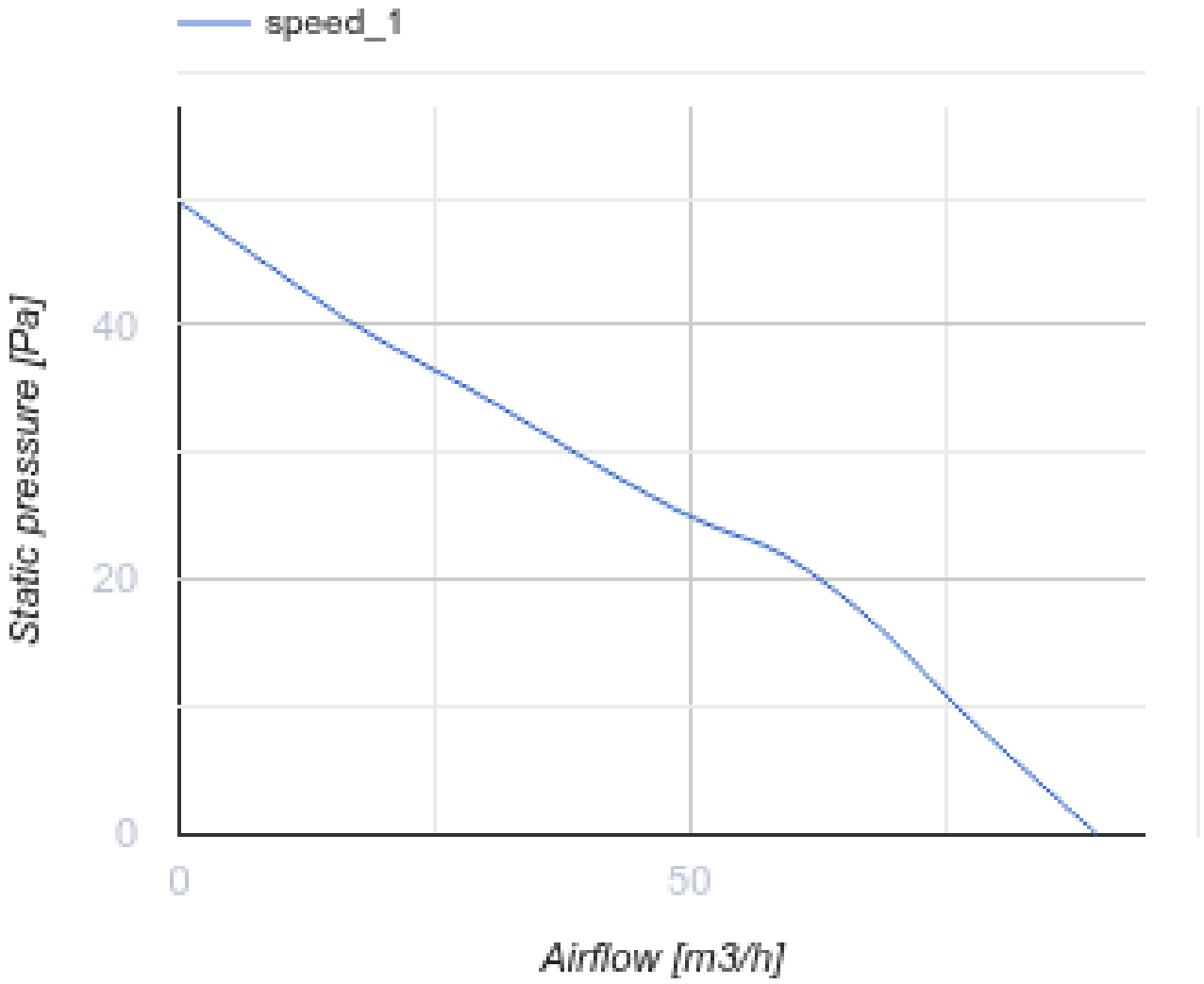

Dimensions

Ø D	L	L1	W
99	110	29	168

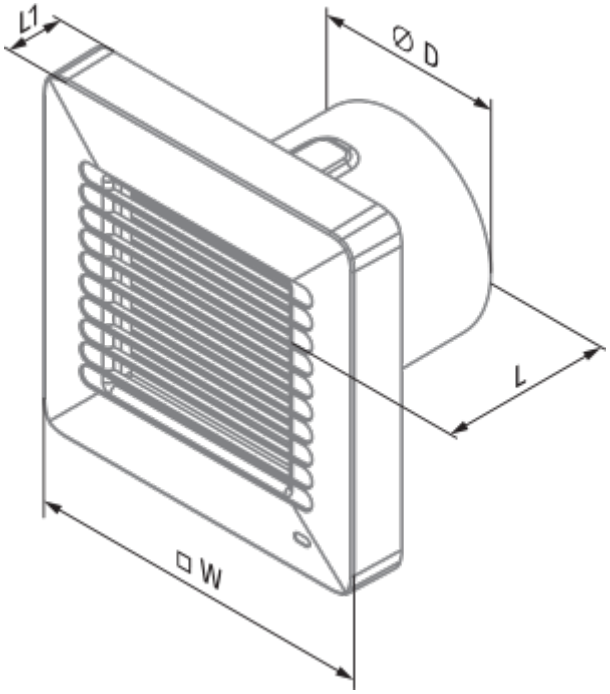
L1
⌀ D
L
□ W

Ecodesign

Trademark	Blauberg					
Model	Q-Matic 100					
Specific energy consumption (SEC) (kWh/(m²/a))	Cold		Average		Warm	
	-30.1	B	-13.7	E	-4.3	F
Type of ventilation unit	Unidirectional					
Type of drive installed	Single speed					
Type of heat recovery system	None					
Maximum flow rate (m³/h)	90					
Electric power input (W)	10					
Reference flow rate (m³/s)	0.018					
Specific power input (SPI) (W/(m³/h))	0.111					
Control typology	Manual control					
Maximum external leakage rates (%)	2.7					
Declared typology	RVU UVU					
Sound power level (dB(A))	45					
The annual electricity consumption (AEC) (kWh/a)	Cold		Average		Warm	
	139		139		139	
The annual heating saved (AHS) (kWh/a)	Cold		Average		Warm	
	3355		1715		776	