

Reneo-Fit D 100 L S14

Suspended heat and energy recovery air handling units

- Heat exchanger type: Counter flow
- Heat exchanger material: Polystyrene
- Sound-insulated casing
- Control: Wired control panel
- Casing material: EPP
- Humidity sensor: Optional
- CO2 sensor: Optional

	Unit of measurement	Reneo-Fit D 100 L S14
Phases	-	1
Minimum supply voltage	V	230
Maximum supply voltage	V	230
Power supply frequency	Hz	50/60
Maximum airflow	m^3/h	130
Heat recovery efficiency, max	%	94
Heat exchanger type	-	Counter flow
Heat exchanger material	-	Polystyrene
Weight	kg	8
Transported air temperature (max)	°C	40
Transported air temperature (min)	°C	-23
Ambient air temperature min	°C	1
Ambient air temperature max	°C	40
Ingress protection rating	-	IP22
Ambient air humidity max	%	60
Ingress protection rating of the drive	-	IP44

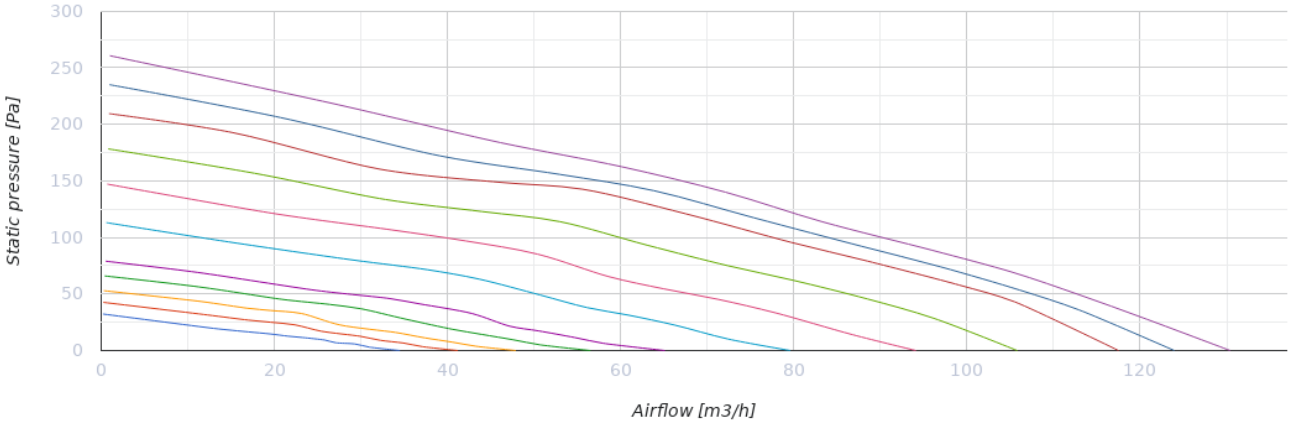

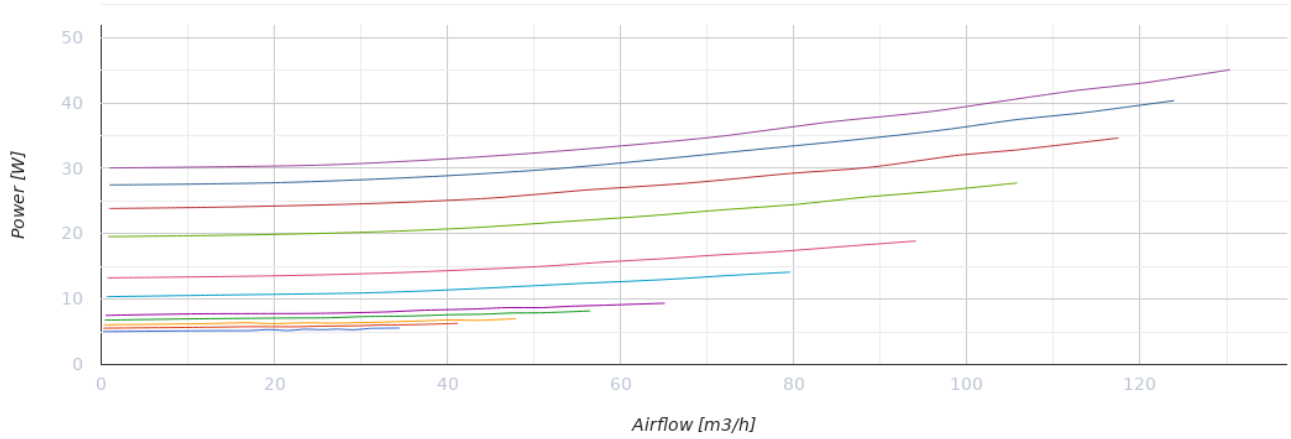

Dimensions

H	L	L1	W	W1
242	530	630	520	600

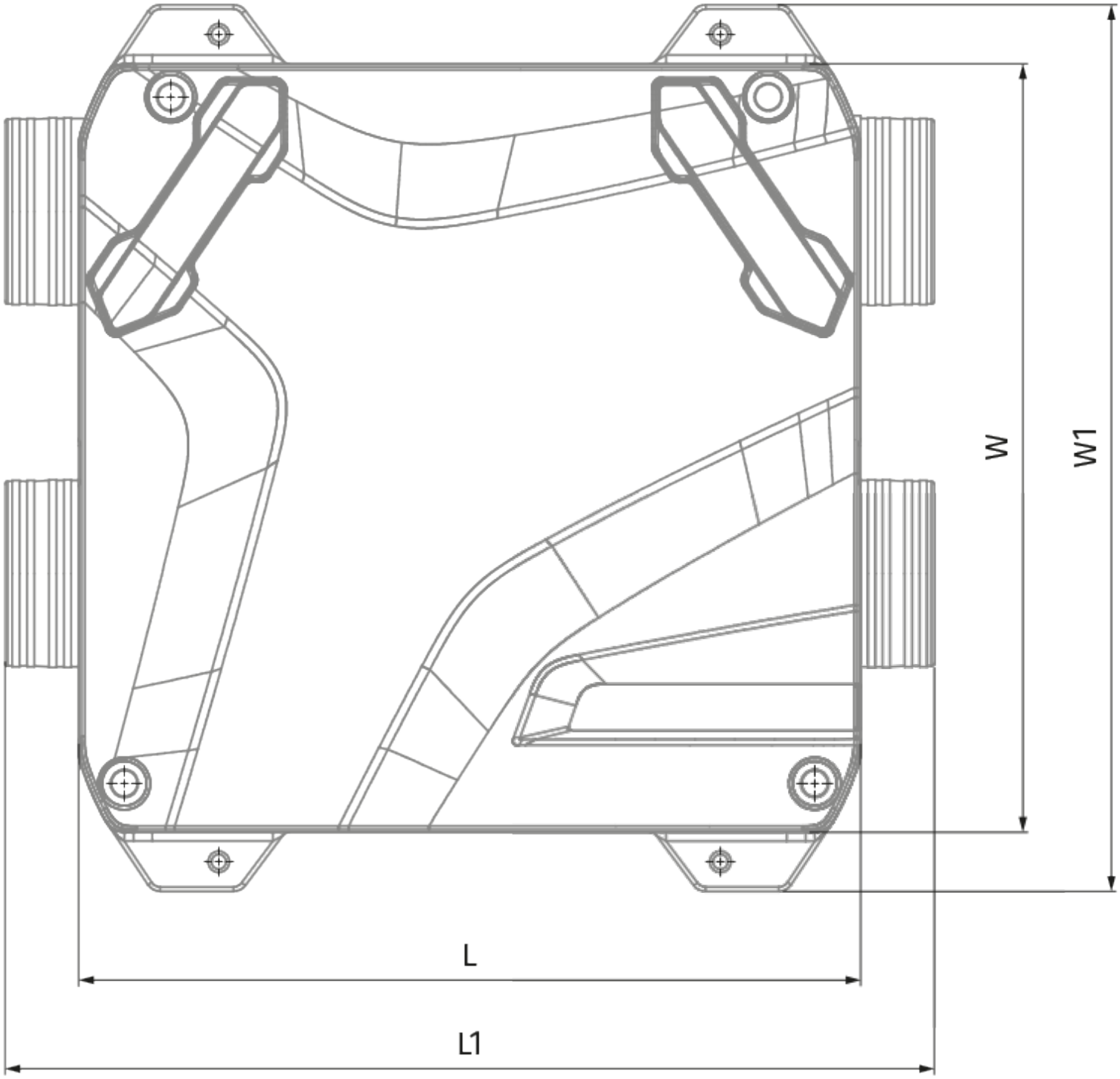
W
W1
L
L1

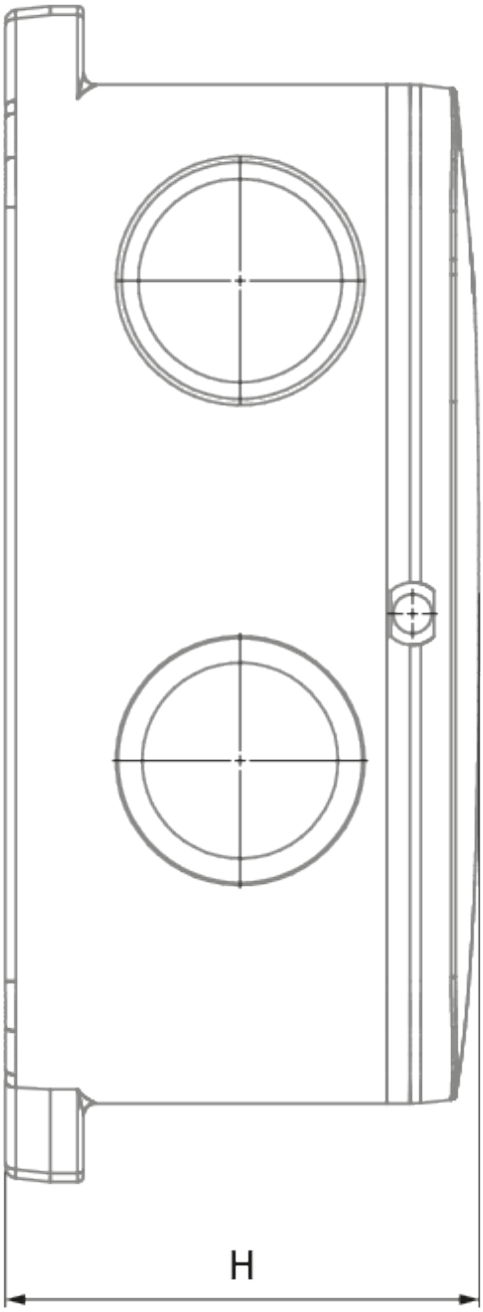
H

Ecodesign

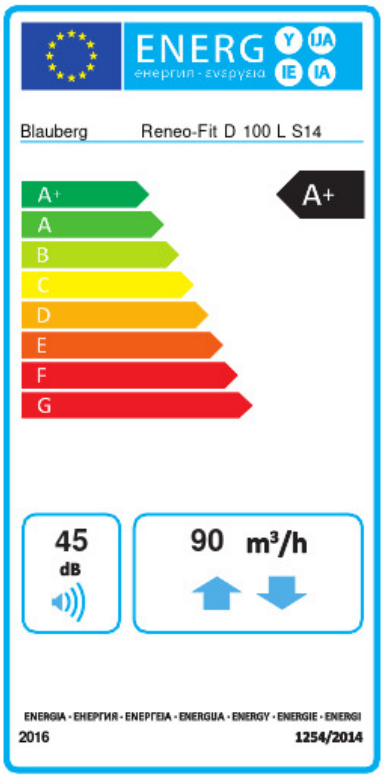

Trademark	Blauberg					
Model	Reneo-Fit D 100 L S14					
Specific energy consumption (SEC) (kWh/(m²/a))	Cold		Average		Warm	
	-81	A+	-42.3	A+	-17.5	E
Type of ventilation unit	Bidirectional					
Type of drive installed	Variable speed					
Type of heat recovery system	Recuperative					
Thermal efficiency of heat recovery (%)	86					
Maximum flow rate (m³/h)	90					
Electric power input (W)	37					
Reference flow rate (m³/s)	0.018					
Reference pressure difference (Pa)	50					
Specific power input (SPI) (W/(m³/h))	0.254					
Control typology	Local demand control					
Maximum internal leakage rates (%)	2.8					
Maximum external leakage rates (%)	3					
Declared typology	RVU BVU					
Sound power level (dB(A))	45					
The annual electricity consumption (AEC) (kWh/a)	Cold		Average		Warm	
	716		179		134	
The annual heating saved (AHS) (kWh/a)	Cold		Average		Warm	
	9019		4610		2085	

Accessories

Condensation drainage

Name	Photo	Description
SFK 20x32		Hydraulic syphon for condensate drainage

For round ducts

Name	Photo	Description

SD 125/600		Silencers for round ducts
SD 125/900		Silencers for round ducts
SD 125/1200		Silencers for round ducts

For round ducts

Name	Photo	Description
VKA 125		Air dampers for round ducts

CO2 sensors

Name	Photo	Description
CD-1		CO2 sensors
CD-2		CO2 sensors

Humidity sensors

Name	Photo	Description
FS2		Humidity sensor

Other accessories

Name	Photo	Description
FP 176x150x22 F7		F7 panel filter

FP 176x150x22 G4		G4 panel filter

Electric actuators

Name	Photo	Description
Belimo TF230		Electric actuators